17

GENERAL CATALOGUE

tekpan®

INDUSTRIAL ENCLOSURES & CABINETS

AUTOMATION and CONTROL SYSTEMS

LOW VOLTAGE POWER DISTRIBUTION SYSTEMS

HISTORY

2017

Panasonic Robotic Welding Machine helps to improve welding productivity. Robotic automation team provide automated welding system solutions.

2018

Thanks to our new Painting Line with recycling system, our enclosure is protected against external factors such as rain and impact.

2019

NEO HC has the advantage of reliable and functional use in the harsh conditions of the outdoor environment with extendable roof option.

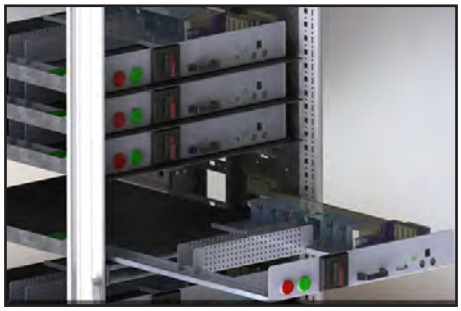

2016

Neo Series Modular Standing Type Enclosure launched to market.

2015

Withdrawable MCC Technology Teos Draw Series launched into market.

2014

PSBB, full automatic metal production line, was established as a big leap was experienced production technology and capacity.

1999

Production of modular standard panels started and products were launched in market

2002

In order to direct the rapid development, the company moved to the factory located to an area of 10.000 square meters in Izmir Kemalpaşa.

2003

Conveyor painting system with full automatic spray line cleaning and iron phosphate coating was adopted and the parts started to be produced without human intervention.

2004

The company, expanded and developed rapidly in domestic market, carried out its first export.

1998

In metal production process, computer based CNC controlled automatic production technology was adopted instead of NC technology.

1995

With electro-static powder coating application, the surface process was carried up to World standards.

1994

The company moved to the factory in İzmir Pınarbaşı as a result of increase market share and production volume.

HISTORY

2021

The PDS is modularized type tested low voltage power distribution and motor control switchboards supported with local partnership system in worldwide.

2022

Our new KT DM compact enclosures are designed according to the needs of our customers to serve in demanding areas of use.

2023

We will continue to share our technologies in our new 35.000 m² factory located in Bağyurdu OSB.

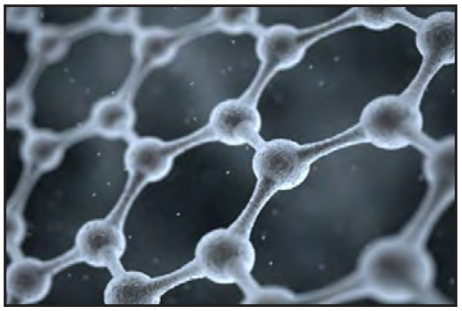

2013

Form 3 and Form 4 type Energy Distribution Cabinets were developed and secure solutions launched for customers.

2012

Teos Series Modular Standing Type Cabinet where it reshaped the standards was launched to market.

2010

By establishing nano-technological coating line, environment-friendly and advanced technology surface process was adopted

2007

As a result of the positive demand increase in export, first overseas export was realised.

2008

Istanbul branch was opened for service and local proximity and logistic supports level was improved.

2009

With introduction of new buildings in İzmir Kemalpaşa, total production area was increased up to 20.000 square meters.

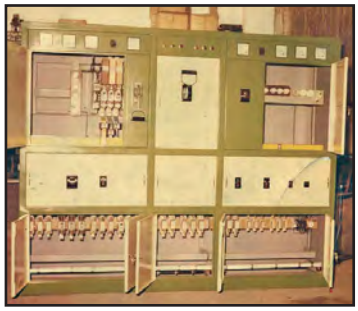

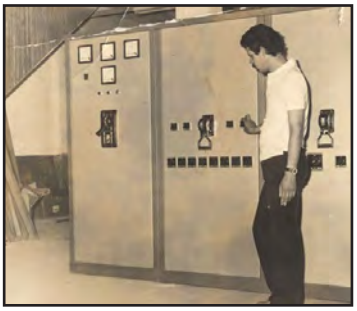

1988

In production, instead of machines controlled and used manually, semi-automatic machines with NC technology started to be used.

1984

For the first time in local application owen method has been applied in wet coating process.

1980

The company expanded in time thanks to its quality products and increasing customer rate, moved to the bigger size atelier in İzmir Çamdibi

1976

The company was established in 1976 by Davut Yanık and Ahmet Yanık in a small atelier in İzmir.

MISSION

We are aware of our products are used in hard conditions. Our duty as tekpan family; defuse those hard conditions away with our suppliers and business associates

VISION

To become one of the two companies in our active geographies that comes to mind for any requirements related to our products.

WCM

Become a model as manufacturer in World-wide.

Become a family, sensitive for occupational safety and environment

HUMAN ORIENTED UNDERSTANDING

DISCIPLINED HUMAN, DISCIPLINED PROCESS

Raw Material Punching and Bending Process

You can watch the video about PSBB.

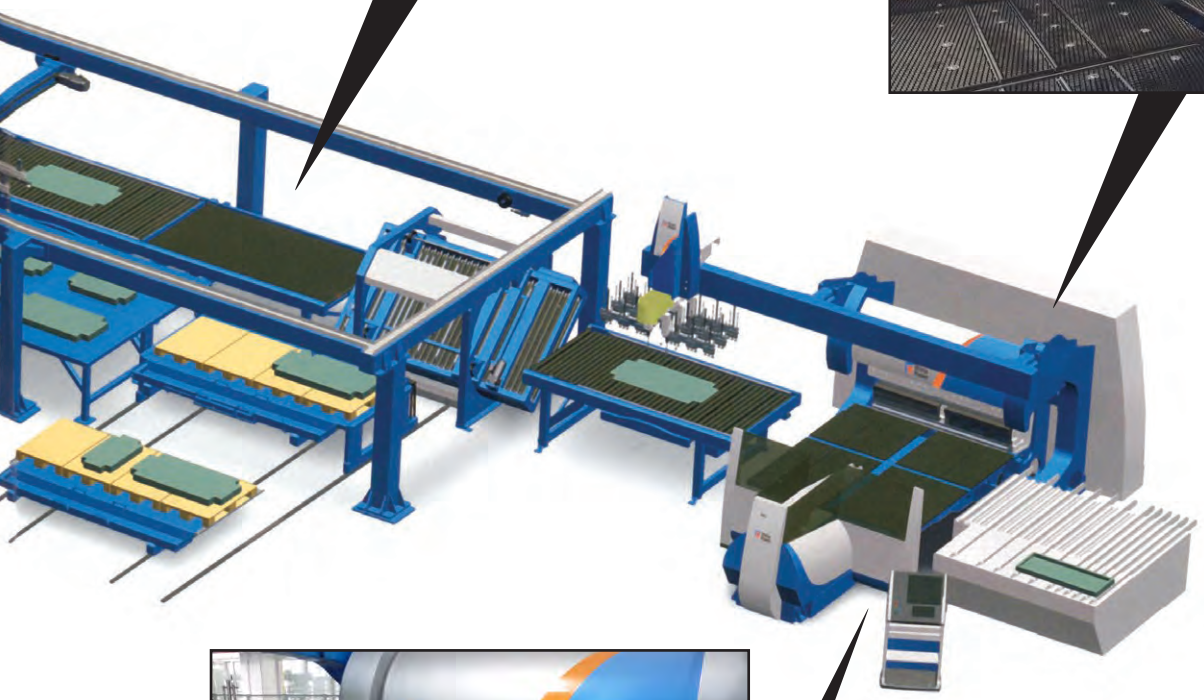

Prima
Power

PRODUCTION

Raw Material Punching Process

Raw Material Bending Process

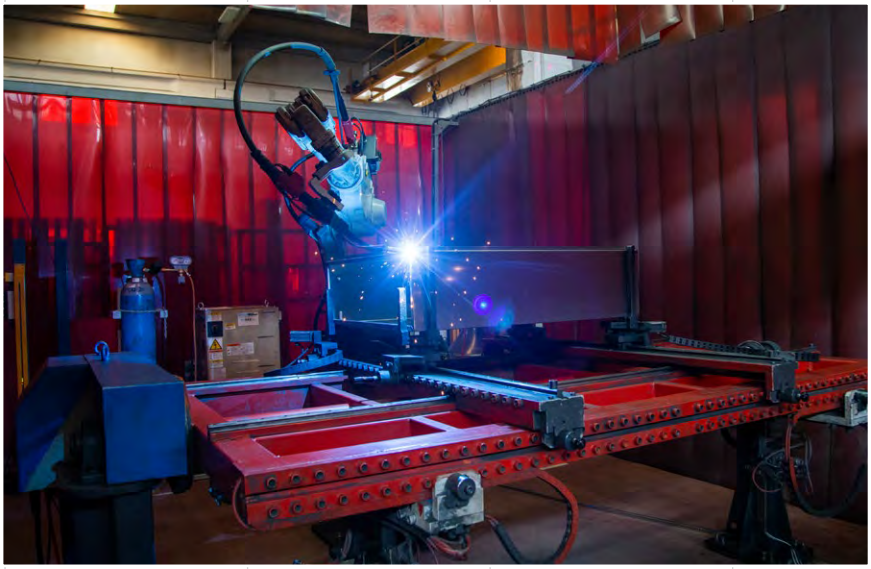

Welding Process

Powder Paint Process

Sealing Gasket Process

Assembly Process

Packaging Process

QUALITY CERTIFICATES

SEISMIC TESTED

c UL US

c UL US

DEKRA

CE

KEMA

NEMA 12

EAC

SYSMIC TEST REPORT 744h

TSE

RoHS

QUALITY

NTINUITY

SIGNATURE

CONTENTS

COMPACT WALL MOUNTED ENCLOSURES 16-91

KT TERMINAL BOX AND BUS BOX
DM SERIES ENCLOSURES
ARES SERIES ENCLOSURES

FLOORSTANDING CABINETS 92-191

TEOS SERIES ENCLOSURES
NEO MODULAR SERIES ENCLOSURES
NEO MONOBLOCK SERIES ENCLOSURES
NEO HC OUTDOOR MODULAR SERIES ENCLOSURES
NEO HC OUTDOOR MONOBLOCK SERIES ENCLOSURES
ASSEMBLY SUPPORT PRODUCTS

CONTROL CONSOLES 192-199

CONTROL DESK
PC CABINET

STAINLESS STEEL ENCLOSURES 200-209

KT TERMINAL BOXES
DM WALL-MOUNTED ENCLOSURES
DT FLOOR STANDING ENCLOSURES
KMT CONTROL DESKS

CONTENTS

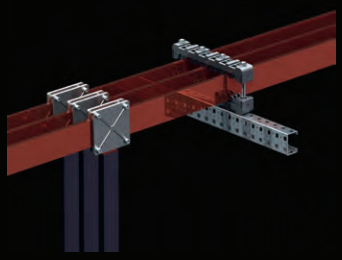

ISOLATORS and BUSBARS and BUSBAR SUPPORTS 210-231

ADJUSTABLE BUSBAR SUPPORT AND METAL SUPPORTED
ADJUSTABLE, FLAT BUSBAR SUPPORTS
COMPACT BUSBAR
PLUG-IN COMPACT BUSBARS
FLEXIBLE COPPER BUSBAR
FLEXIBLE BUSBAR SUPPORT
BUSBAR SUPPORT

PERFORMANCE SUPPORT PRODUCTS 232-245

VENTILATION FILTERS AND FANS
AIR-CONDITIONERS AND HEAT EXCHANGERS
HEATERS
THERMAL CONTROL PRODUCTS

ASSEMBLY SUPPORT PRODUCTS 246-259

LIGHTING ACCESSORIES
GROUP POWER SOCKETS
LOCK ACCESSORIES
MOUNTING ACCESSORIES

TECHNICAL DRAWINGS 260-290

TECHNICAL SPECIFICATIONS 291-294

tekpan®

INDUSTRIAL ENCLOSURES & CABINETS

NEW DESIGN KT & DM SERIES

Are Changing the Standards...

INDEX // COMPACT WALL MOUNTED ENCLOSURES

KT
KT Terminal Box
KT Solid Door Bus Box
KT Glazed Door Bus Box
20

DM-S
DM-Small Enclosure
30

DM-M
DM-Medium Solid Door Enclosure
DM-Medium Glazed Door Enclosure
34

DM-L
DM-Large Enclosure
44

ARES
ARES Enclosure
74

KT DM
ASSEMBLY SUPPORT PRODUCTS 50

ARES
ASSEMBLY SUPPORT PRODUCTS 86

Our new design compact enclosures

More Functional

Our experience is to ease challenging conditions. We offer practical and comfortable solutions with a broad range of ergonomic designs and accessories.

More Accessible

We combined our expertise with technology. You can now access all our solutions via QR code whenever you need them.

More Aesthetic

The Radius corner structure gives our enclosures a modern and elegant design, offering an aesthetic look and distinct style.

Safer

Our next-generation compact enclosures were manufactured with automatic welding by state-of-the-art robots. They offer a longer service life and higher durability with their robust and safe structure.

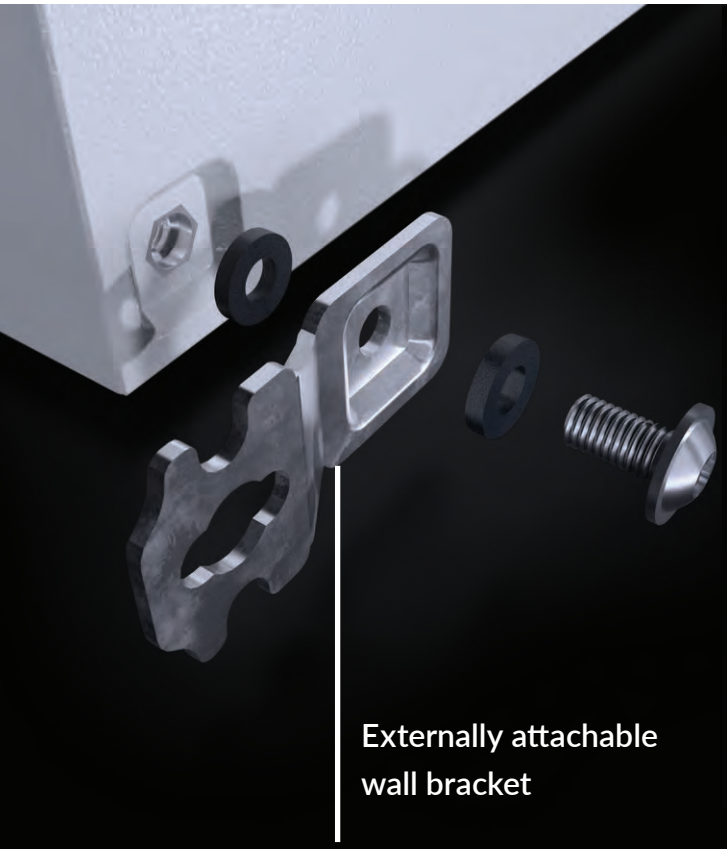

Externally attachable wall bracket

Earthing integration

Easy access with 180° opening hinges

Modern and stylish look with the Radius corner structure and new lock

Easy lock/unlock flexibility with the quarter-turn lock system

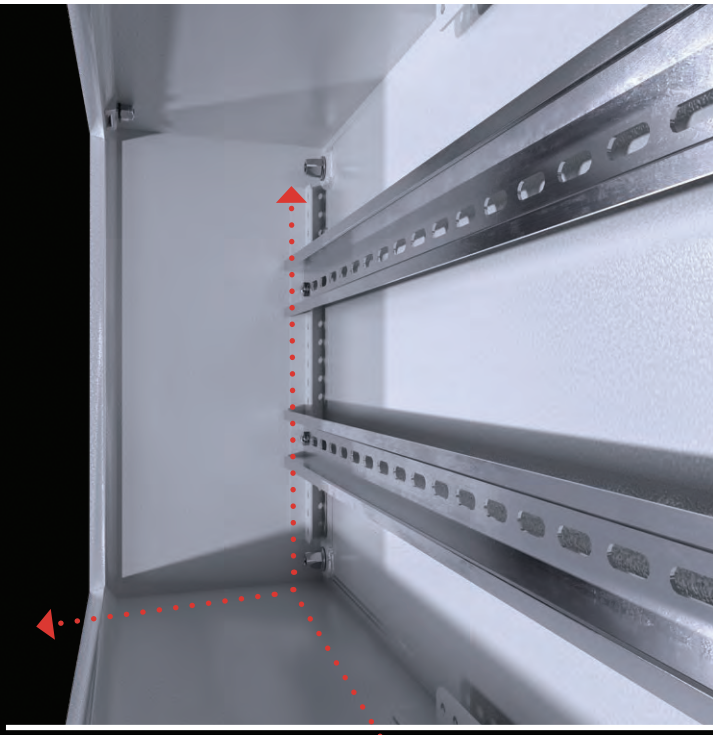

Mountable with 7.5 - 15 mm DIN rail for wide usage area
Possibility to attach mounting plate with wide usage area

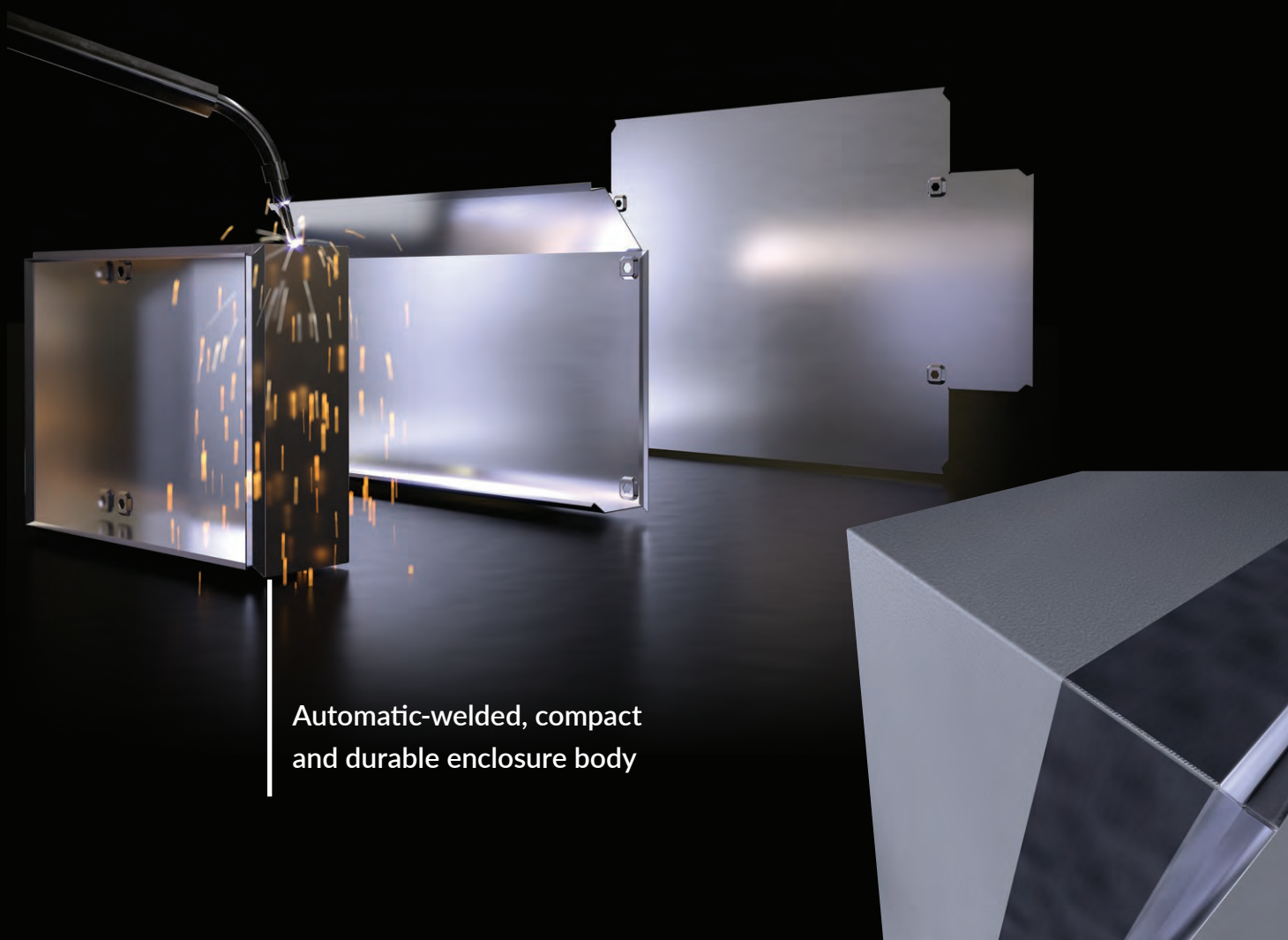

Automatic-welded, compact and durable enclosure body

KT TERMINAL BOX

Materials	: Main Body, Door Mild Steel
Surface Finishing	: Iron-phosphate + electrostatic powder coating RAL 7035
IP Rate	: IEC EN 60529 IP 66
NEMA Rate	: Nema 4
Standards	: IEC 62208 (Enclosure Standards)
Corrosion Rate	: C3-M based on TS EN ISO 12944-2
Warranty	: KYT-72
Supply Includes	: Body, Locked Cover, Assembly Parts

ACCESSORIES:

Wall Bracket p.: 55

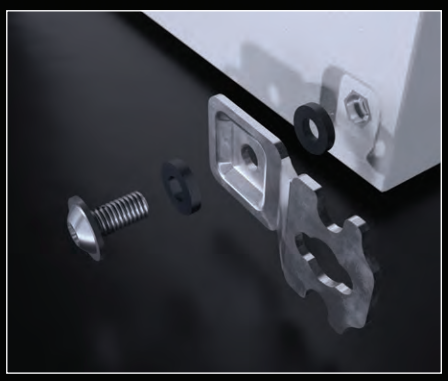

Mounting Plate p.: 60

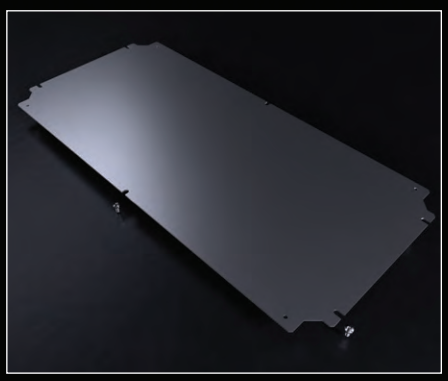

Earthing Cable p.: 71

Other Accessories p.: 50

KT TERMINAL BOX

PRODUCT CODE	ENCLOSURE				STEEL THICKNESSES		COVER		
	W*	H*	D*	WEIGHT	BODY	COVER	LOCK	HINGE	VERSION
	mm	mm	mm	kg	mm	mm	pcs.	pcs.	
KT 351.180	150	150	80	1,15	1,2	1,2	4	N/A	1
KT 352.180	200	150	80	1,38	1,2	1,2	4	N/A	1
KT 352.280	200	200	80	1,65	1,2	1,2	4	N/A	1
KT 353.180	300	150	80	1,83	1,2	1,2	4	N/A	1
KT 353.280	300	200	80	2,19	1,2	1,2	4	N/A	1
KT 354.280	400	200	80	2,74	1,2	1,2	4	N/A	1
KT 351.112	150	150	120	1,67	1,2	1,2	4	N/A	1
KT 352.112	200	150	120	1,94	1,2	1,2	4	N/A	1
KT 352.212	200	200	120	2,24	1,2	1,2	4	N/A	1
KT 353.112	300	150	120	2,46	1,2	1,2	4	N/A	1
KT 353.212	300	200	120	2,86	1,2	1,2	4	N/A	1
KT 353.312	300	300	120	3,67	1,2	1,2	4	N/A	1
KT 354.112	400	150	120	2,98	1,2	1,2	4	N/A	1
KT 354.212	400	200	120	3,48	1,2	1,2	4	N/A	1
KT 354.312	400	300	120	4,48	1,2	1,2	4	N/A	1
KT 354.412	400	400	120	5,47	1,2	1,2	4	N/A	1
KT 355.212	500	200	120	4,10	1,2	1,2	4	N/A	1
KT 355.312	500	300	120	5,28	1,2	1,2	4	N/A	1
KT 356.212	600	200	120	4,72	1,2	1,2	4	N/A	1
KT 356.312	600	300	120	6,09	1,2	1,2	6	N/A	2
KT 356.412	600	400	120	7,46	1,2	1,2	6	N/A	2
KT 358.212	800	200	120	5,96	1,2	1,2	6	N/A	2
KT 358.412	800	400	120	9,45	1,2	1,2	6	N/A	2

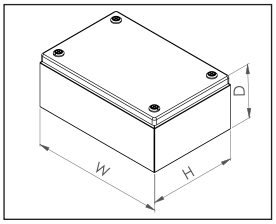

Version 1

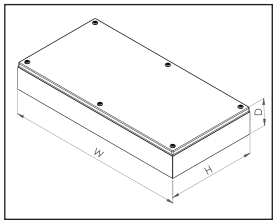

Version 2

Catalogue

Assembly Instructions

KT SOLID DOOR BUS BOX

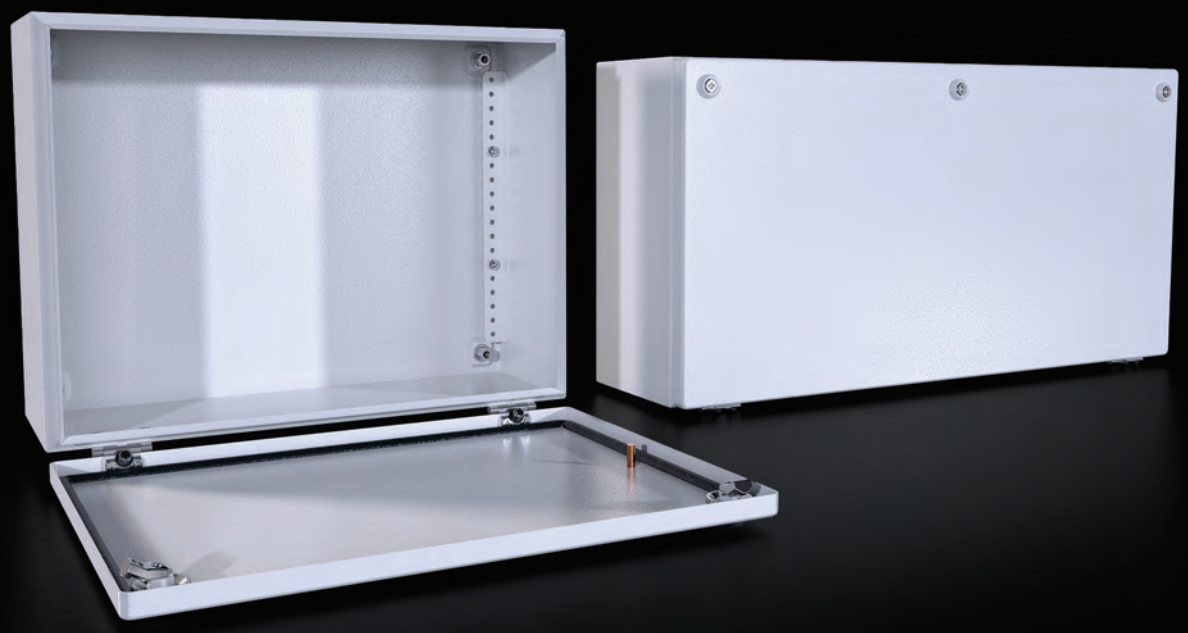

Materials	: Main Body, Door Mild Steel
Surface Finishing	: Iron-phosphate + electrostatic powder coating RAL 7035
IP Rate	: IEC EN 60529 IP 66
NEMA Rate	: Nema 4
Standards	: IEC 62208 (Enclosure Standards)
Corrosion Rate	: C3-M based on TS EN ISO 12944-2
Warranty	: KYT-72
Supply Includes	: Body, Hinged Door, Assembly Parts

ACCESSORIES:

Wall Bracket p.: 55

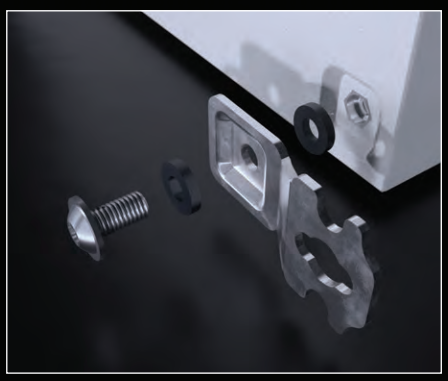

Mounting Plate p.: 60

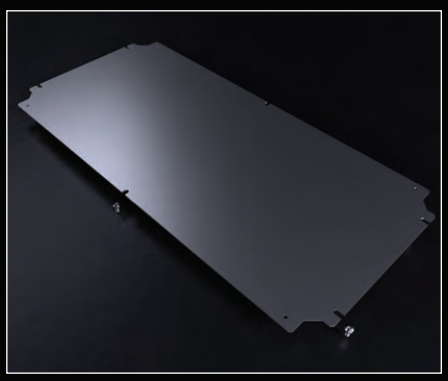

Earthing Cable p.: 71

Other Accessories p.: 50

KT SOLID DOOR BUS BOX

PRODUCT CODE	ENCLOSURE				STEEL THICKNESSES		COVER		
	W*	H*	D*	WEIGHT	BODY	COVER	LOCK	HINGE	VERSION
	mm	mm	mm	kg	mm	mm	pcs.	pcs.	
KT 364.215	400	200	155	4,23	1,2	1,2	2	2	1
KT 364.315	400	300	155	5,29	1,2	1,2	2	2	1
KT 366.315	600	300	155	7,04	1,2	1,2	3	2	2
KT 368.315	800	300	155	8,78	1,2	1,2	3	3	3

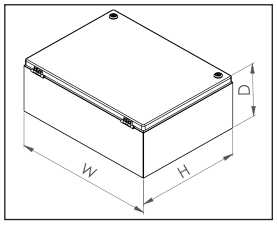

Version 1

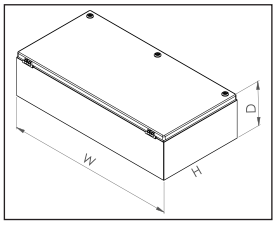

Version 2

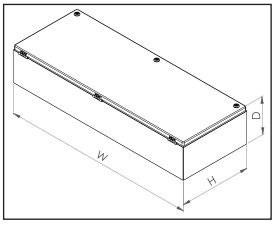

Version 3

Catalogue

Assembly Instructions

KT GLAZED DOOR BUS BOX

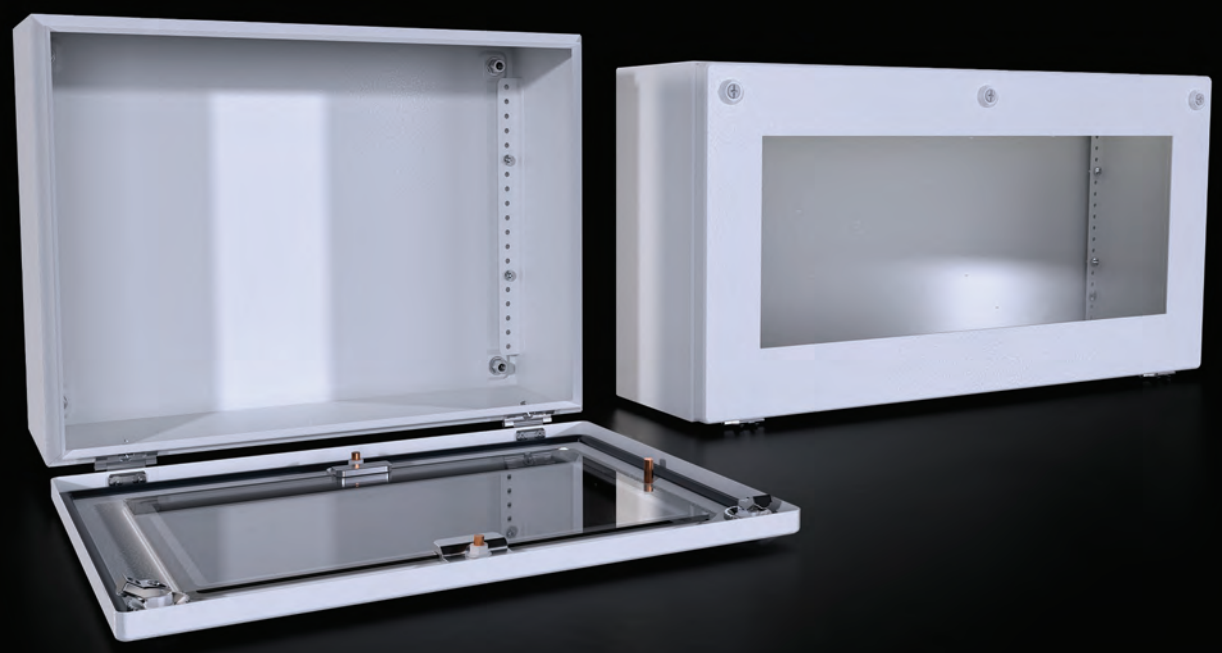

Materials	: Main Body, Door Mild Steel
Surface Finishing	: Iron-phosphate + electrostatic powder coating RAL 7035
IP Rate	: IEC EN 60529 IP 66
NEMA Rate	: Nema 4
Standards	: IEC 62208 (Enclosure Standards)
Corrosion Rate	: C3-M based on TS EN ISO 12944-2
Warranty	: KYT-72
Supply Includes	: Body, Glazed Hinged Door, Assembly Parts

ACCESSORIES:

Wall Bracket p.: 55

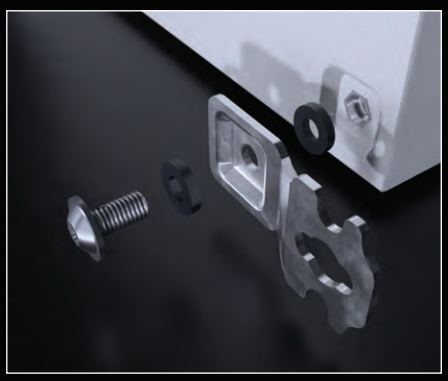

Mounting Plate p.: 60

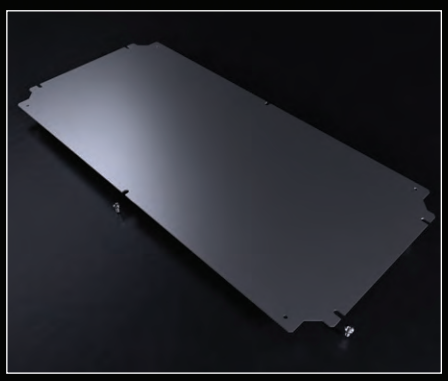

Earthing Cable p.: 71

Other Accessories p.: 50

KT GLAZED DOOR BUS BOX

PRODUCT CODE	ENCLOSURE				STEEL THICKNESSES		COVER		
	W*	H*	D*	WEIGHT	BODY	COVER	LOCK	HINGE	VERSION
	mm	mm	mm	kg	mm	mm	pcs.	pcs.	
KT 374.215	400	200	155	4,23	1,2	1,2	2	2	1
KT 374.315	400	300	155	5,29	1,2	1,2	2	2	1
KT 376.315	600	300	155	7,04	1,2	1,2	3	2	2
KT 378.315	800	300	155	8,78	1,2	1,2	3	3	3

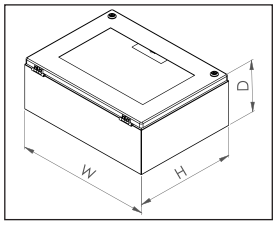

Version 1

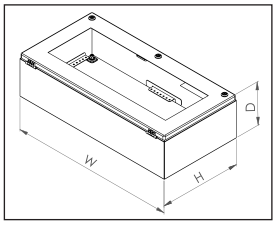

Version 2

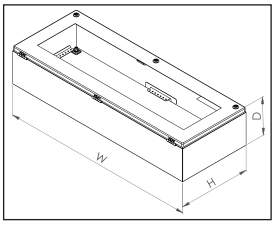

Version 3

Catalogue

Assembly Instructions

DM SMALL / *Highlights*

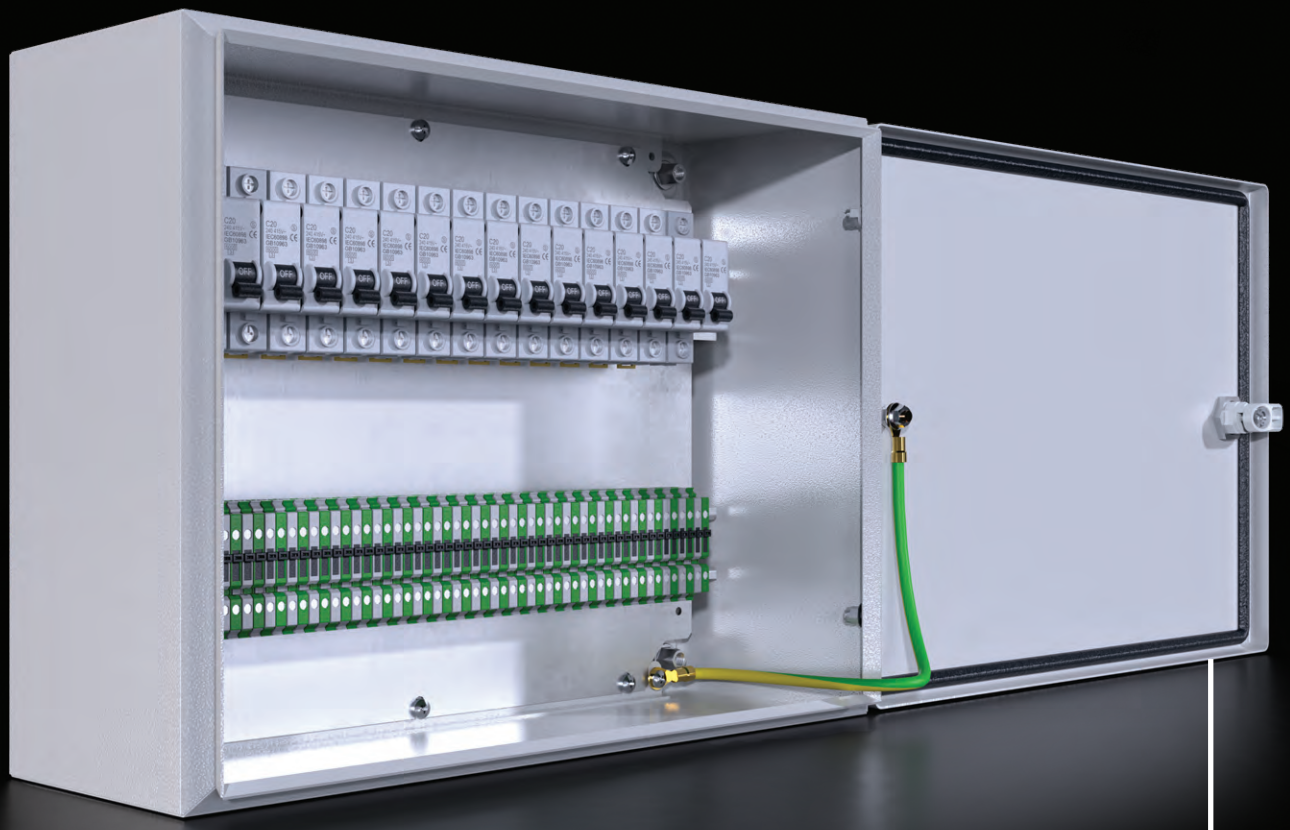

Earthing integration easy access
with 180° opening hinge

Automatic-welded,
compact & durable enclosure body

Externally attachable wall bracket

Large interior volume with
thin curved body structure

Modern and stylish look with
Radius corner structure

DM-SMALL ENCLOSURE

Materials	: Body and Door Mild Steel Mounting Plate Galvanized Steel
Surface Finishing	: Iron-phosphate + electrostatic powder coating RAL 7035
IP Rate	: IEC EN 60529 IP 65
NEMA Rate	: Nema 4
Standards	: IEC 62208 (Enclosure Standards)
Corrosion Rate	: C3-M based on TS EN ISO 12944-2v
Warranty	: KYT-72
Supply Includes	: Body, Hinged Door, Mounting Plate, Assembly Parts

ACCESSORIES:

Wall Bracket p.: 55

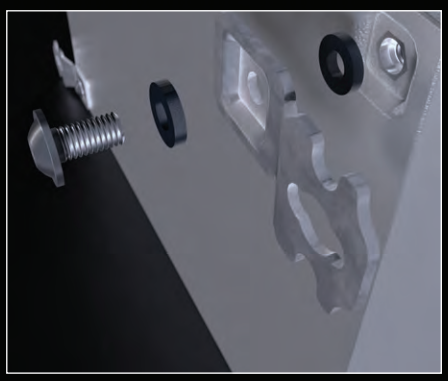

Earthing Cable p.: 71

Other Accessories p.: 50

DM-SMALL ENCLOSURE

PRODUCT CODE	ENCLOSURE				MOUNTING PLATE		STEEL THICKNESSES			DOOR	
	W*	H*	D*	WEIGHT	W	H	BODY	DOOR	MOUNTING PLATE	LOCK	HINGE
	mm	mm	mm	kg	mm	mm	mm	mm	mm	pcs.	pcs.
DM 232.201	200	200	150	3,29	175	185	1,2	1,2	2	1	2
DM 232.251	200	250	150	3,77	175	235	1,2	1,2	2	1	2
DM 232.215	250	250	150	4,33	225	235	1,2	1,2	2	1	2
DM 232.315	250	300	150	4,90	225	285	1,2	1,2	2	1	2
DM 232.351	250	350	150	5,47	225	335	1,2	1,2	2	1	2
DM 233.315	300	300	150	5,55	275	285	1,2	1,2	2	1	2
DM 233.415	300	400	150	6,86	275	385	1,2	1,2	2	1	2
DM 234.315	400	300	150	6,84	375	285	1,2	1,2	2	1	2

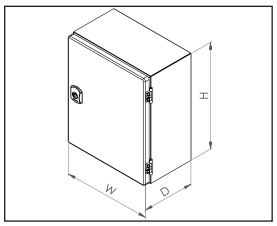

Version 1

Catalogue

Assembly Instructions

DM MEDIUM / *Highlights*

Large interior volume and wide door applications with thin curved body structure

Continuous rain protection with roof option

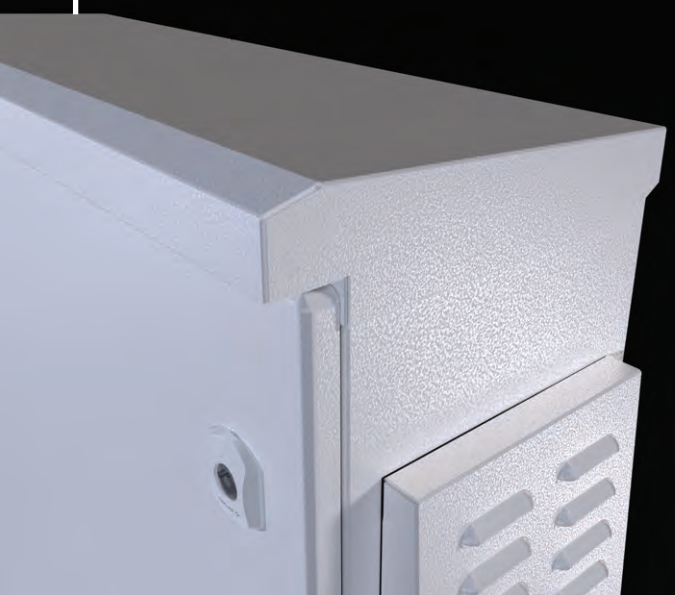

Pole Mounting Feature

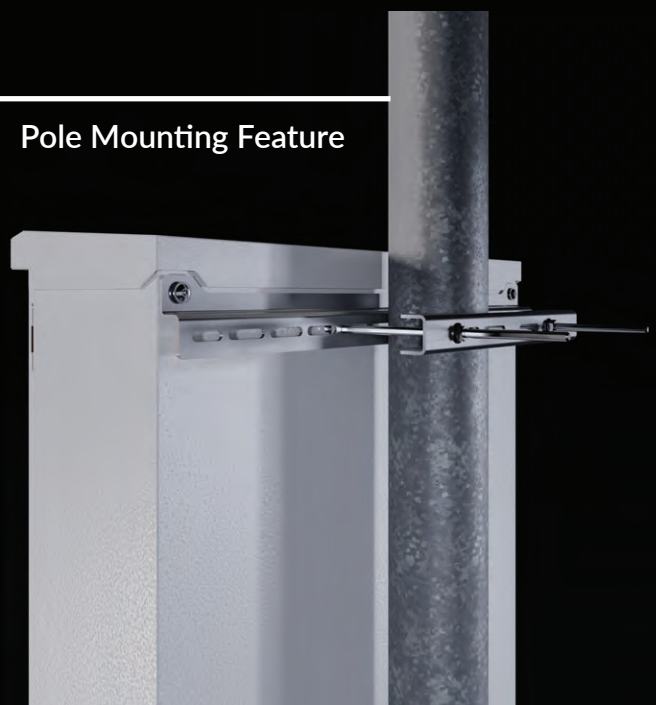

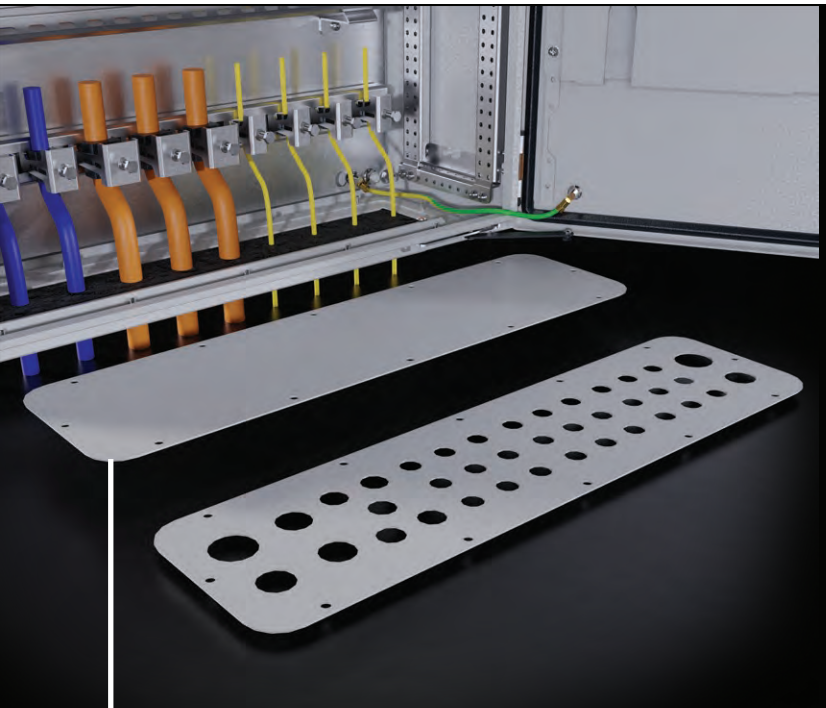

Gland plate structure with a flat and wide usage area and earthing integration.
Safety and functionality with cable management options. Earthing integration

Stylish and modern look with Radius corner design

Operational use with glazed doors and internal covers

DM MEDIUM / *Highlights*

Strong 3-point lock structure

Door stability with door support part

Externally attachable wall bracket

Static durability with
curved mounting plate

Easy mounting
plate assembly

Automatic-welded, compact and durable body.

DM-MEDIUM SOLID DOOR ENCLOSURE

Materials	: Body, Front Door, Gland Plate Mild Steel Mounting Plate Galvanized Steel
Surface Finishing	: Iron-phosphate + electrostatic powder coating RAL 7035
IP Rate	: IEC EN 60529 Single Door IP66, Double Door IP54
NEMA Rate	: Nema 4
Standards	: IEC 62208 (Enclosure Standards)
Corrosion Rate	: C3-M based on TS EN ISO 12944-2
Warranty	: KYT-72
Supply Includes	: Body, Hinged Door, Gland Plate, Mounting Plate, Assembly Parts

ACCESSORIES:

Wall Bracket p.: 55

Earthing Cable p.: 71

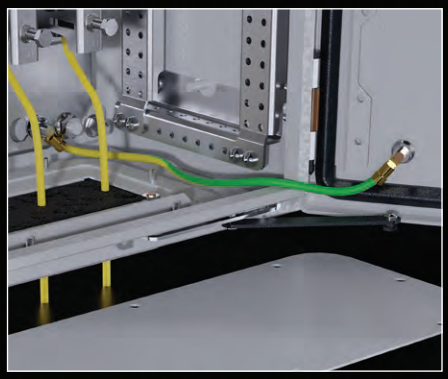

Other Accessories p.: 50

DM-MEDIUM SOLID DOOR ENCLOSURE

PRODUCT CODE	ENCLOSURE				MOUNTING PLATE		STEEL THICKNESSES			DOOR		
	W*	H*	D*	WEIGHT	W	H	BODY	DOOR	MOUNTING PLATE	LOCK	HINGE	VERSION
	mm	mm	mm	kg	mm	mm	mm	mm	mm	pcs.	pcs.	
DM 252.315	250	300	150	5,09	200	275	1,2	1,2	2	1	2	1
DM 252.321	250	300	210	6,58	200	275	1,2	1,2	2	1	2	1
DM 252.351	250	350	150	5,66	200	325	1,2	1,2	2	1	2	1
DM 253.315	300	300	150	5,75	250	275	1,2	1,2	2	1	2	1
DM 253.321	300	300	210	7,29	250	275	1,2	1,2	2	1	2	1
DM 253.415	300	400	150	7,06	250	375	1,2	1,2	2	1	2	1
DM 253.421	300	400	210	8,71	250	375	1,2	1,2	2	1	2	1
DM 253.521	300	500	210	10,13	250	475	1,2	1,2	2	2	2	2
DM 254.315	400	300	150	7,07	350	275	1,2	1,2	2	1	2	1
DM 254.421	400	400	210	10,49	350	375	1,2	1,2	2	1	2	1
DM 254.515	400	500	150	10,37	350	475	1,2	1,2	2	2	2	2
DM 254.521	400	500	210	12,25	350	475	1,2	1,2	2	2	2	2
DM 254.526	400	500	260	14,02	350	475	1,2	1,2	2	2	2	2
DM 254.530	400	500	300	15,57	350	475	1,2	1,2	2	2	2	2
DM 254.615	400	600	150	12,02	350	575	1,2	1,2	2	2	2	2
DM 254.621	400	600	210	14,01	350	575	1,2	1,2	2	2	2	2
DM 254.626	400	600	260	15,88	350	575	1,2	1,2	2	2	2	2
DM 254.630	400	600	300	17,51	350	575	1,2	1,2	2	2	2	2
DM 254.830	400	800	300	27,06	350	775	1,2	1,5	2	2	2	2

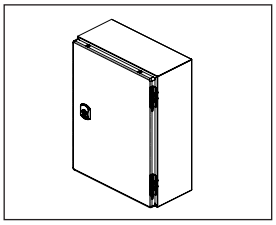

Version 1

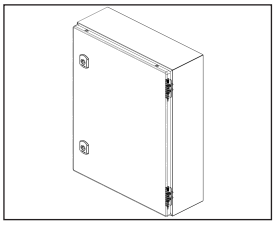

Version 2

Catalogue

Assembly Instructions

DM-MEDIUM SOLID DOOR ENCLOSURE

Materials	: Body, Front Door, Gland Plate Mild Steel Mounting Plate Galvanized Steel
Surface Finishing	: Iron-phosphate + electrostatic powder coating RAL 7035
IP Rate	: IEC EN 60529 Single Door IP66, Double Door IP54
NEMA Rate	: Nema 4
Standards	: IEC 62208 (Enclosure Standards)
Corrosion Rate	: C3-M based on TS EN ISO 12944-2
Warranty	: KYT-72
Supply Includes	: Body, Hinged Door, Gland Plate, Mounting Plate, Assembly Parts

DM-MEDIUM SOLID DOOR ENCLOSURE

PRODUCT CODE	ENCLOSURE				MOUNTING PLATE		STEEL THICKNESSES			DOOR		
	W*	H*	D*	WEIGHT	W	H	BODY	DOOR	MOUNTING PLATE	LOCK	HINGE	VERSION
	mm	mm	mm	kg	mm	mm	mm	mm	mm	pcs.	pcs.	
DM 255.421	500	400	210	12,26	450	375	1,2	1,2	2	2	2	1
DM 255.521	500	500	210	14,37	450	475	1,2	1,2	2	2	2	2
DM 255.530	500	500	300	18,50	450	475	1,2	1,2	2	2	2	2
DM 255.615	500	600	150	15,12	450	575	1,2	1,2	2	2	2	2
DM 255.621	500	600	210	17,22	450	575	1,2	1,5	2	2	2	2
DM 255.626	500	600	260	19,18	450	575	1,2	1,5	2	2	2	2
DM 255.630	500	700	300	20,89	450	575	1,2	1,5	2	2	2	2
DM 255.721	500	700	210	19,45	450	675	1,2	1,5	2	2	2	2
DM 255.726	500	400	260	21,50	450	675	1,2	1,5	2	2	2	2
DM 256.421	600	400	210	14,84	550	375	1,2	1,5	2	2	2	1
DM 256.621	600	600	210	20,07	550	575	1,5	2	2	2	2	2
DM 256.630	600	600	300	23,90	550	575	1,5	2	2	2	2	2
DM 256.640	600	600	400	28,88	550	575	1,5	2	2	2	3	2
DM 256.821	600	800	210	30,23	550	775	1,5	2	2	2	3	2
DM 256.826	600	800	260	33,03	550	775	1,5	2	2	1	3	2
DM 256.830	600	800	300	35,43	550	775	1,5	2	2	2	3	2
DM 256.840	600	800	400	42,11	550	775	1,5	2	2	1	3	2
DM 256.126	600	1000	260	39,47	550	975	1,5	2	2	2	3	3
DM 256.130	600	1000	300	42,06	550	975	1,5	2	2	1	3	3
DM 256.123	600	1200	300	48,69	550	1175	1,5	2	2	1	3	5
DM 258.630	800	600	300	29,50	750	575	1,5	2	2	2	2	2
DM 258.632	800	600	300	29,50	750	575	1,5	2	2	2	4	4
DM 258.821	800	800	210	38,18	750	775	1,5	2	2	2	2	2
DM 258.830	800	800	300	43,80	750	775	1,5	2	2	2	2	2
DM 258.126	800	1000	260	49,37	750	975	1,5	2	2	2	3	3
DM 258.130	800	1000	300	52,16	750	975	1,5	2	2	2	3	3
DM 258.123	800	1200	300	60,51	750	1175	1,5	2	2	1	3	5

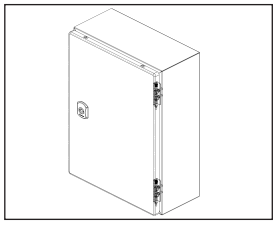

Version 1

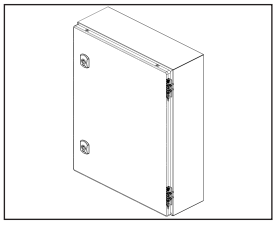

Version 2

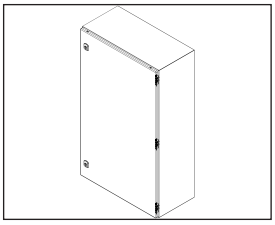

Version 3

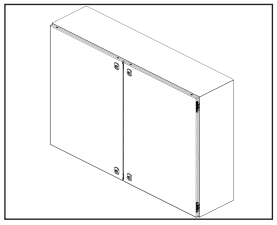

Version 4

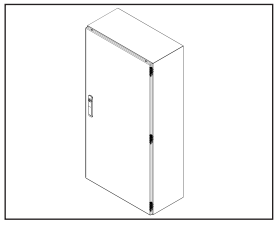

Version 5

Catalogue

Assembly Instructions

DM-MEDIUM GLAZED DOOR ENCLOSURE

Materials	: Body, Front Door, Gland Plate Mild Steel, 4-mm Transparent Tempered Glass
Surface Finishing	: Iron-phosphate + electrostatic powder coating RAL 7035
IP Rate	: IEC EN 60529 IP 66
NEMA Rate	: Nema 4
Standards	: IEC 62208 (Enclosure Standards)
Corrosion Rate	: C3-M based on TS EN ISO 12944-2
Warranty	: KYT-72
Supply Includes	: Body, Glazed Hinged Door, Gland Plate, Assembly Parts

ACCESSORIES:

Wall Bracket p.: 55

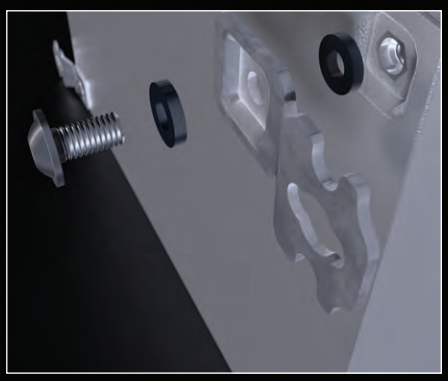

Mounting Plate p.: 60

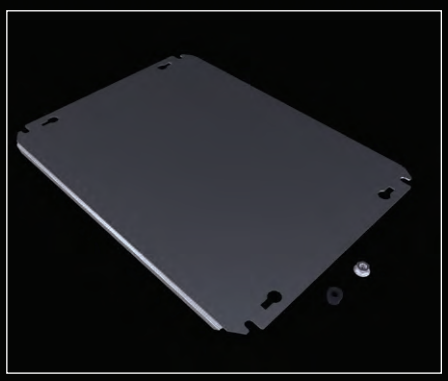

Earthing Cable p.: 71

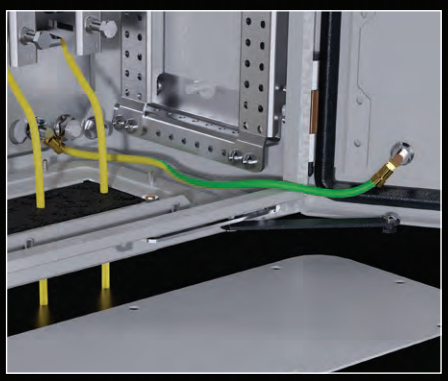

Other Accessories p.: 50

DM-MEDIUM GLAZED DOOR ENCLOSURE

PRODUCT CODE	ENCLOSURE				MOUNTING PLATE		STEEL THICKNESSES		DOOR		
	W*	H*	D*	WEIGHT	W	H	BODY	DOOR	LOCK	HINGE	VERSION
	mm	mm	mm	kg	mm	mm	mm	mm	pcs.	pcs.	
DM 274.521	400	500	210	9,54	350	475	1,2	1,2	2	2	1
DM 274.530	400	500	300	12,87	350	475	1,2	1,2	2	2	1
DM 274.621	400	600	210	10,73	350	575	1,2	1,2	2	2	1
DM 274.630	400	600	300	14,23	350	575	1,2	1,2	2	2	1
DM 275.621	500	600	210	13,04	450	575	1,2	1,5	2	2	1
DM 275.630	500	600	300	16,70	450	575	1,2	1,5	2	2	1
DM 275.721	500	700	210	14,53	450	675	1,2	1,5	2	2	1
DM 275.726	500	700	260	16,59	450	675	1,2	1,5	2	2	1
DM 276.621	600	600	210	14,74	550	575	1,2	1,5	2	2	1
DM 276.630	600	600	300	18,58	550	575	1,2	1,5	2	2	1
DM 276.821	600	800	210	23,08	550	775	1,5	2	2	2	1
DM 276.830	600	800	300	28,29	550	775	1,5	2	2	2	1
DM 276.126	600	1000	260	30,50	550	975	1,5	2	2	3	2
DM 276.130	600	1000	300	33,10	550	975	1,5	2	2	3	2
DM 276.123	600	1200	300	37,90	550	1175	1,5	2	1	3	3
DM 278.130	800	1000	300	40,10	750	975	1,5	2	2	3	2
DM 278.123	800	1200	300	46,00	750	1175	1,5	2	1	3	3

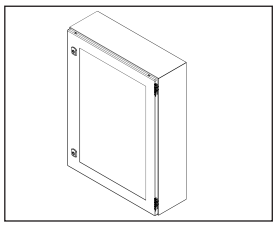

Version 1

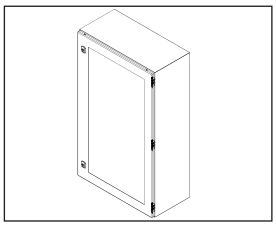

Version 2

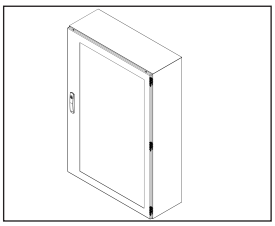

Version 3

Catalogue

Assembly Instructions

DM LARGE / *Highlights*

Large interior volume with thin curved body structure.
Wide door application area

Earthing integration

Externally attachable
wall bracket

Easy mounting plate assembly
and support system

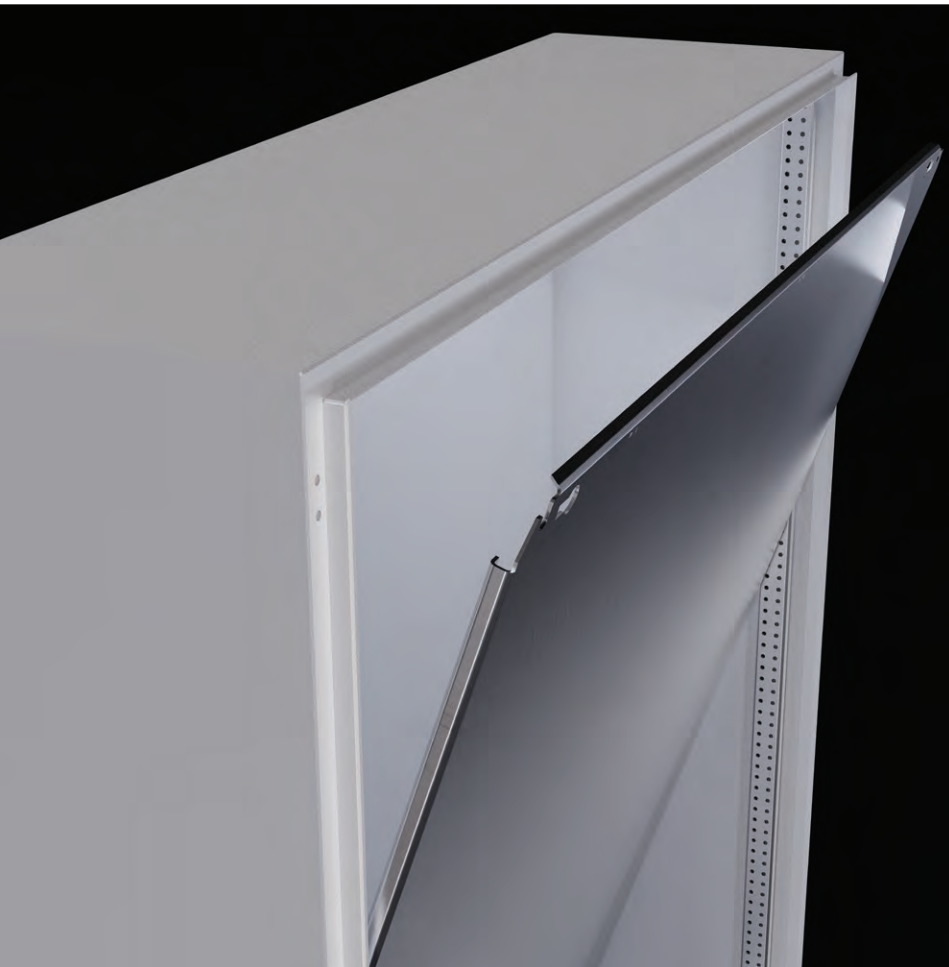

Static durability with curved
mounting plate

DM LARGE / *Highlights*

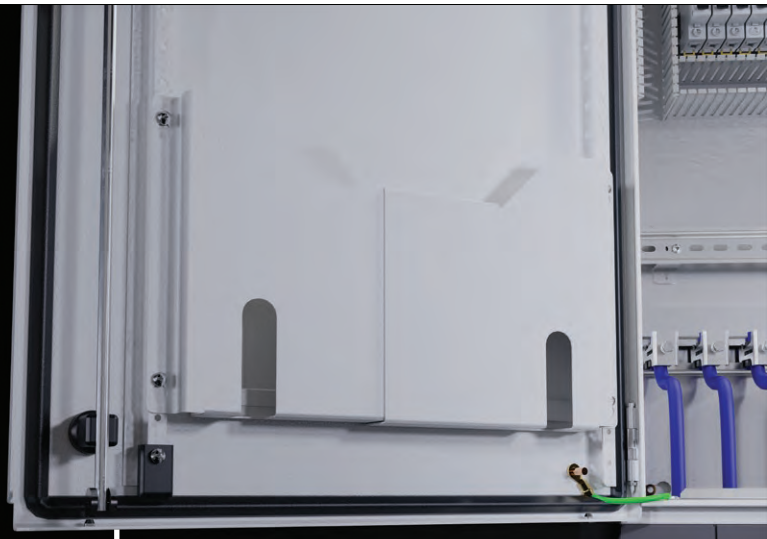

Door stability with
door support part

Strong 3-point lock structure

Floor standing compatibility with
ready-to-use plinth holes

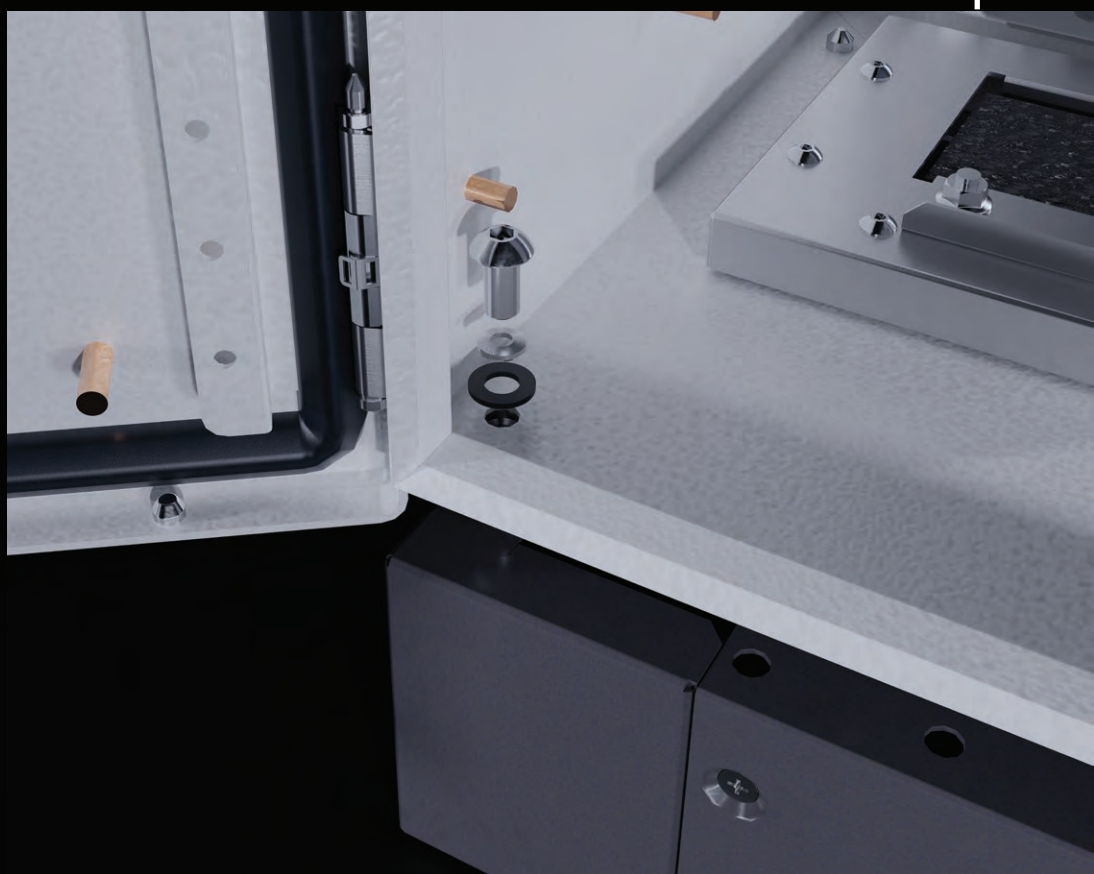

Modern and stylish look
with Radius corner

Continuous rain protection
with roof option

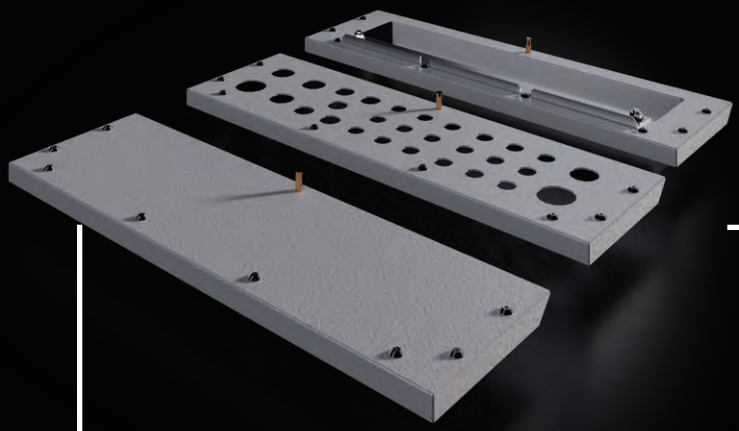

Safe and functional usage with cable
management options

Floor standing compatibility with interior
access gland plate

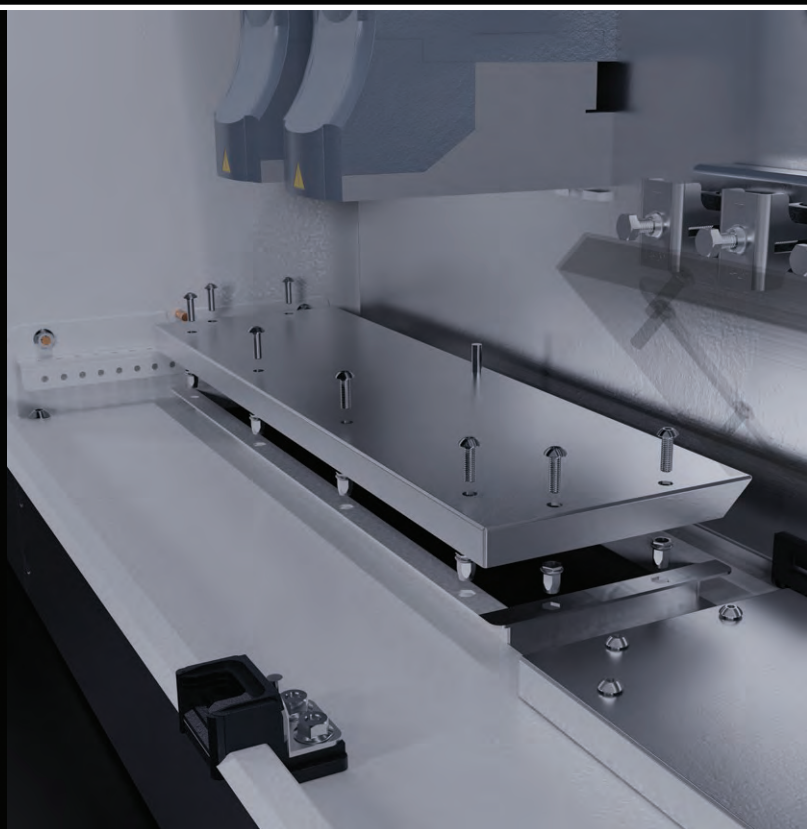

DM-LARGE ENCLOSURE

Materials	: Body, Front Door, Gland Plate Mild Steel Mounting Plate Galvanized Steel
Surface Finishing	: Iron-phosphate + electrostatic powder coating RAL 7035
IP Rate	: IEC EN 60529 Single Door IP 66, Double Door IP54
NEMA Rate	: Nema 4
Standards	: IEC 62208 (Enclosure Standards)
Corrosion Rate	: C3-M based on TS EN ISO 12944-2
Warranty	: KYT-72
Supply Includes	: Body, Hinged Door, Gland Plate, Mounting Plate, Assembly Parts

ACCESSORIES:

Wall Bracket p.: 55

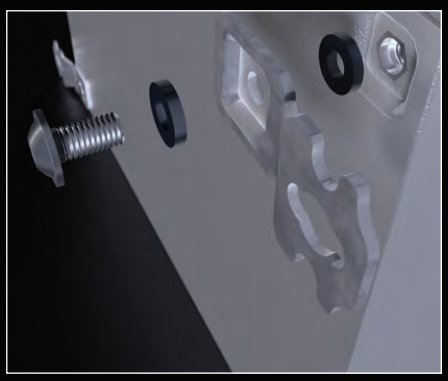

Earthing Cable p.: 71

Other Accessories p.: 50

DM-LARGE ENCLOSURE

PRODUCT CODE	ENCLOSURE				MOUNTING PLATE		STEEL THICKNESSES			DOOR		
	W*	H*	D*	WEIGHT	W	H	BODY	DOOR	MOUNTING PLATE	LOCK	HINGE	VERSION
	mm	mm	mm	kg	mm	mm	mm	mm	mm	pcs.	pcs.	
DM 286.140	600	1000	400	36,73	550	975	1,5	2	2	2	3	1
DM 286.124	600	1200	400	43,83	550	1175	1,5	2	2	1	3	2
DM 288.140	800	1000	400	45,55	750	975	1,5	2	2	2	3	1
DM 288.124	800	1200	400	54,36	750	1175	1,5	2	2	1	3	2
DM 281.130	1000	1000	300	57,81	950	975	1,5	2	2	4	6	3
DM 281.123	1000	1200	300	68,07	950	1175	1,5	2	2	2	6	4
DM 281.143	1000	1400	300	78,33	950	1375	1,5	2	2	2	6	4
DM 281.144	1000	1400	400	81,80	950	1375	1,5	2	2	2	6	4
DM 281.830	1200	800	300	54,63	1150	775	1,5	2	2	4	4	3
DM 281.840	1200	800	400	56,68	1150	775	1,5	2	2	4	4	3
DM 281.230	1200	1200	300	78,60	1150	1175	1,5	2	2	2	6	4
DM 281.140	1200	1200	400	81,60	1150	1175	1,5	2	2	2	6	4

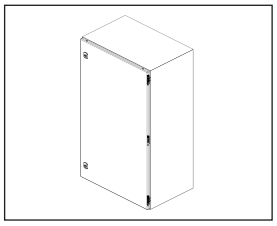

Version 1

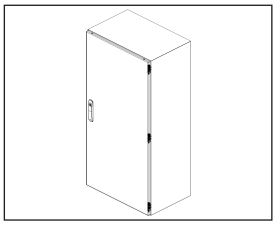

Version 2

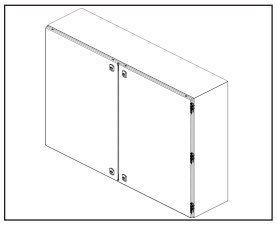

Version 3

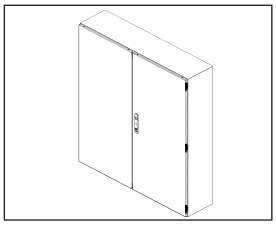

Version 4

Catalogue

Assembly Instructions

DM ENCLOSURE PLINTH AND BASE

MODULAR PLINTH

PLINTH SIDE CARRIER

Relevance : DM - M / DM - L

Materials : 2 mm Galvanized + RAL 7012 Coating

Supply Includes: 2 x Plinth Side Carriers and Enclosure Assembly Parts

REQUIRED : Plinth Front Cover.

PRODUCT CODE	Plinth Height (mm)	Enclosure Depth (mm)
973.310	100	300
973.410	100	400
973.320	200	300
973.420	200	400

PLINTH FRONT COVER

Relevance : DM - M / DM - L / TEOS / NEO

Materials : 1.5mm. Galvanizeded + RAL 7012 Coating

Supply Includes: 2 x Plinth Front Cover

NOTE : 2 Sets Are Required in 200 H Selections.

PRODUCT CODE	Enclosure Width (mm)
709.150	500
709.160	600
709.180	800
709.100	1000
709.120	1200

PRESSURE DISCHARGE

Product Code : 973.501

Materials : PA6 POLYAMIDE RAL 7035

Supply Includes: 1 x gland and nut

IP Rate : IP68 IEC 60529'A GÖRE

Balances pressure differences between inner housing and the outside enviroment

- Air permeability up to 120 litres/hour with a pressure difference of 70 mbar
- Connection thread M12 x 1.5
- For fitting in wall thicknesses up to 2 mm

CONDENSATION DISCHARGE

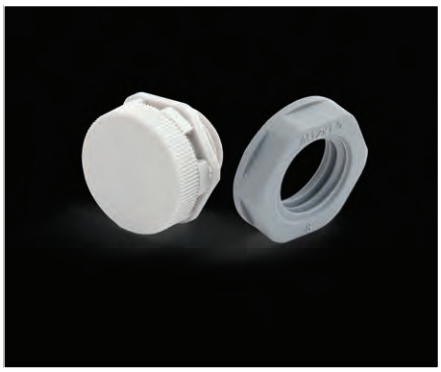

Product Code : 973.500 (with nuts)

Materials : PA6 POLYAMIDE RAL 7035

Supply Includes: 1 x gland and nut

IP Rate : IP56 IEC 60529'A GÖRE

Prevents the formation of the water condensation in tightly-seated standart housings

- Connection thread M12 x 1.5

DM ENCLOSURE CABLE AND MANAGEMENT

CABLE ENTRY SYSTEM WITH SOCKET

Materials : Polipropilen (PP) , CONTA : Elastomer , UL94 V0

Supply Includes: 1 x Gland casing and Nut

IP Rate : IP66 ACCORDING TO IEC 60529, UL TYPE 4X

REQUIRED : Gland Insert (p 51)

NOTE : 2 Inserts should be used for model 973.504 M50/2.

- You can use the detachable gland structure to pass the socket or the prepared cable sets of the cable entry system with a socket.
- Cables with diameter 1 to 16 mm are passed through. Sealing is ensured and also stress is reduced..
- A protection rate of IP66 according to IEC 60529 is achieved with the cable entry system with a socket.

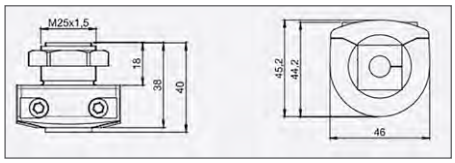

PRODUCT CODE 973.502
M25/1 GLAND CASING

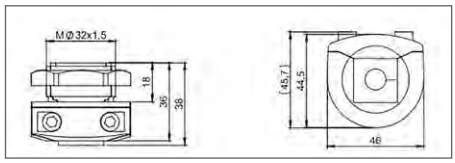

PRODUCT CODE 973.503
M32/1 GLAND CASING

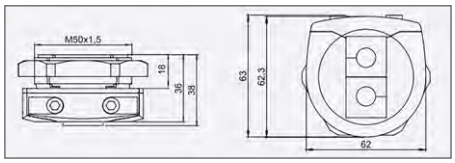

PRODUCT CODE 973.504
M50/2 GLAND CASING

GLAND INSERTS

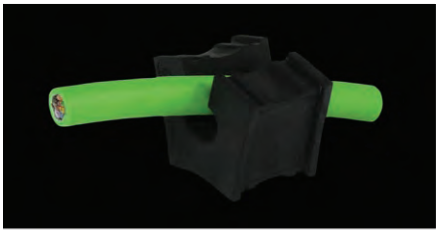

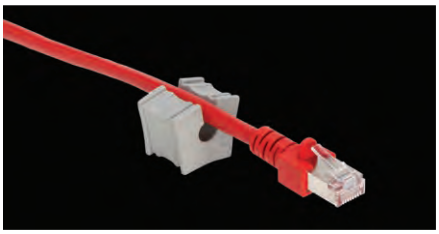

Materials : Elastomer , UL94 V0

IP Rate : IP66 ACCORDING TO IEC 60529, UL TYPE 4X

REQUIRED : Gland casing is required for using Insert Products

PRODUCT CODE	CABLE DIAMETER mm	PACKAGE QUANTITY
973.505	4 - 5	1
973.506	5 - 6	1
973.507	6 - 7	1
973.508	7 -8	1
973.509	8 - 9	1
973.510	9 - 10	1
973.511	10 - 11	1
973.512	11 - 12	1
973.513	12 - 13	1
973.514	13 -14	1
973.515	14 - 15	1
973.516	15 - 16	1

PRODUCT CODE	CABLE DIAMETER mm	PACKAGE QUANTITY
973.517	4 - 5	10
973.518	5 - 6	10
973.519	6 - 7	10
973.520	7 -8	10
973.521	8 - 9	10
973.522	9 - 10	10
973.523	10 - 11	10
973.524	11 - 12	10
973.525	12 - 13	10
973.526	13 -14	10
973.527	14 - 15	10
973.528	15 - 16	10

DM ENCLOSURE CABLE AND MANAGEMENT

POLYAMIDE CABLE GLANDS

Materials : Polypropylene (PP), GASKET: Elastomer, UL94 V0

Supply Includes: Glands and Nuts

IP Rate : IP66 ACCORDING TO IEC 60529

PRODUCT CODE	TYPE	CABLE DIAMETER mm	PACKAGE QUANTITY
973.543	M12	3 - 6.5	50
973.544	M16	5 - 10	50
973.545	M20	10 - 14	50
973.546	M25	13 - 18	25
973.547	M32	18 - 25	15
973.548	M40	22 - 32	5

BRASS CABLE GLANDS

Materials : Brass, Nickel-Coated

Supply Includes: Glands and Nuts

Materials : Brass, Nickel-Coated

IP Rate : IP66 ACCORDING TO IEC 60529

PRODUCT CODE	TYPE	CABLE DIAMETER mm	PACKAGE QUANTITY
973.563	M12	3 - 6.5	10
973.564	M16	5 - 10	10
973.565	M20	10 - 14	10
973.566	M25	13 - 18	10
973.567	M32	18 - 25	5
973.568	M40	22 - 32	5

GLAND PLATE WITH FOAM ENTRY (DM MEDIUM)

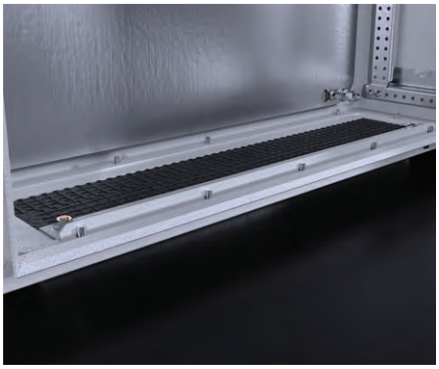

Relevance : DM - M

Materials : 1.5 mm Mild + RAL 7035 Coating

Supply Includes: Gland Plate, Adhesive Foam and Enclosure, Assembly Parts

IP Rate : Up to IP55 if assembled correctly (according to IEC 60529)

NOT : 2 pieces should be selected for enclosures with width of 800.

PRODUCT CODE	ENCLOSURE WIDTH (mm)	ENCLOSURE DEPTH (mm)
973.007	300	210
973.008	400	210
	400	260
973.009	400	300
973.010	500	210
	500	260
973.011	500	300
973.012	600	210
	600	260
973.013	600	300
	600	400
973.008	800	210
	800	260
973.009	800	300

DM ENCLOSURE CABLE AND MANAGEMENT

GLAND PLATE WITH FOAM ENTRY (DM LARGE)

Relevance : DM - L

Materials : 1.5 mm Mild + RAL 7035 Coating

Supply Includes: Gland Plate, Adhesive Foam and Enclosure Assembly Parts

IP Rate : Up to IP55 if assembled correctly (according to IEC 60529)

NOT : 2 pieces should be selected for enclosures with width of 800

PRODUCT CODE	Width (mm)	Depth (mm)
973.014	600	400
973.015	800	400
973.016	1000	300
973.017	1000	400
973.018	1200	300
973.019	1200	400

CABLE CRIMPING SYSTEM

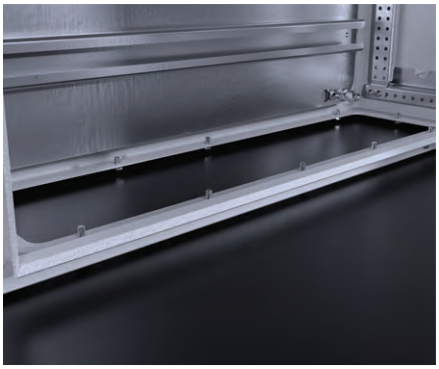

CABLE CONNECTION RAIL

Relevance : DM - M / DM - L

Materials : 2 mm Galvanized

Supply Includes: 1 x Cable Connection Rail and Enclosure Assembly Parts

NOT : For enclosures with 1000 or 1200 width 500-600-wide Rails can be mounted as Double.

PRODUCT CODE	Enclosure Width	Rail Width
973.940	400	317
973.950	500	417
973.960	600	517
973.980	800	717

NOTE: To raise the rail or give it an angular raise, please see Rail Raisers (page 58)

CABLE CLAMP

Relevance : Cable Connection Rails

Materials : MILD + ZINC COATING AND POLYAMIDE CRIMPER

REQUIRED : Cable Connection Rail

PRODUCT CODE	Cable Diameter	Package Quantity
1050.0814	8 - 14	30
1050.1420	14 - 20	20
1050.2028	20 - 28	15

KT AND DM ENCLOSURE FIXING AND MOVING

M12 EYEBOLT CARRIER

Product Code : 613.000

Relevance : DM-L

Materials : Carbon Steel + Electro-Galvanized Coating

Supply Includes: 2 x Eyebolts and Enclosure Assembly Parts

Vertical bearing capacity
For each eyebolt: F = 2000 N

Angular bearing capacity
For each eyebolt:
45 Degrees F = 2400 N
60 Degrees F = 3200 N

ADHESIVE GASKET

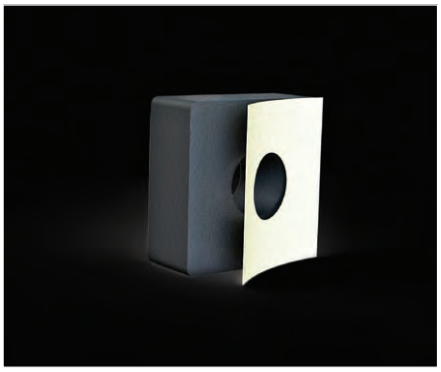

Product Code : 971.400

Relevance : KT and DM Series

Materials : EPDM Gasket

Supply Includes: 4 pieces 8 mm Single-Sided EPDM Gasket

NOTE : Used as a seal in bolted connection to a flat surface where wall mount hangers cannot be used.

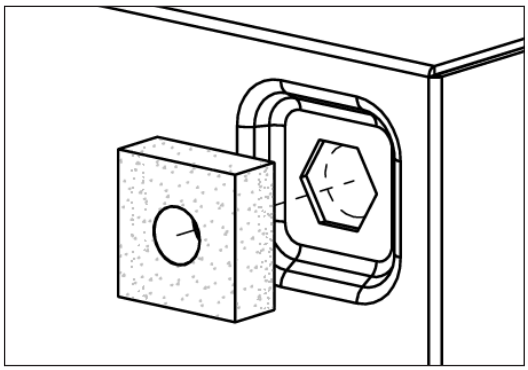

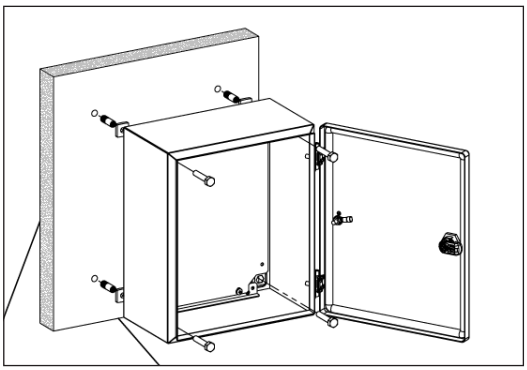

KT AND DM ENCLOSURE FIXING AND MOVING

WALL BRACKET

Product Code : **971.300**

Relevance : KT and DM Series

Materials : 2.5 mm HRP + CR+3 Coating

Supply Includes: 4 x Wall Bracket and Enclosure Assembly Parts

Load Bearing Capacity : 2800 N - Vertical

Load Bearing Capacity : 1500 N - Horizontal

POLE MOUNT

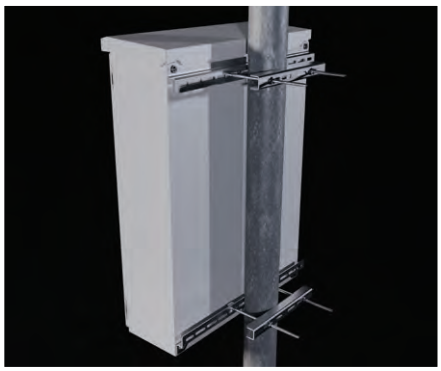

Relevance : DM Medium 300 - 400 - 500 - 600 Width

Materials : 3 mm Galvanized

Supply Includes: 1 x Cable Connection Rail and Enclosure Assembly Parts

REQUIRED : Cable Connection Rail

- Pole Diameter ; Ø 40mm. (min.) - Ø 190 mm. (max.)
- Pole Size (Square) ; □ 50mm (min.) - □ 150 mm (max.)

PRODUCT CODE	Enclosure Width (mm)
973.003	300
973.004	400
973.005	500
973.006	600

DM ENCLOSURE 19 " ASSEMBLY

19" RAIL

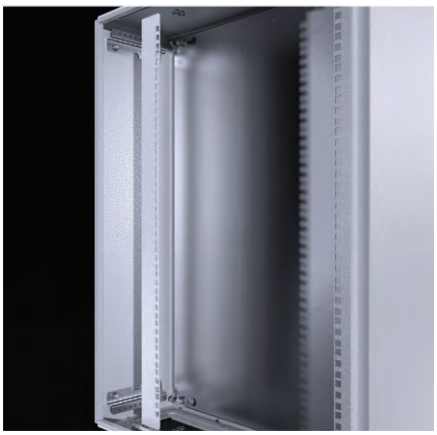

Relevance : 600-wide DM-M Enclosures

Materials : 2mm Galvanized

Supply Includes: 2 x 19" Profile and Enclosure Assembly Parts

Relevance : All Lock Systems

REQUIRED : DM Depth Rail (p. 57)

PRODUCT CODE	Enclosure Height (mm)	MODEL
973.712	700	12 U - 19" Rail
973.716	800	16 U - 19" Rail
973.721	1000	21 U - 19" Rail
973.724	1200	24 U - 19" Rail

ROOF

OUTDOOR ROOF

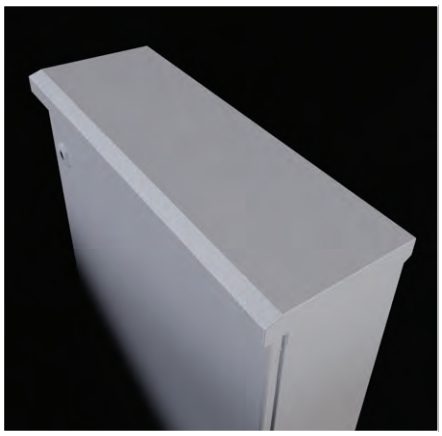

Relevance : DM-M / DM-L

Materials : 1.5 mm Galvanized + RAL 7035 Coating

Supply Includes: 1 x Outdoor Roof, 1 x Gauge + Enclosure Assembly Parts

NOTE : Recommended to be used in single door enclosures.

PRODUCT CODE	Enclosure Width (mm)	Enclosure Depth (mm
973.032	300	210
973.042	400	210
973.052	500	210
973.062	600	210
973.063	600	300
973.083	800	300
973.103	1000	300
973.064	600	400
973.084	800	400

INTERIOR ASSEMBLY PRODUCTS

SIDE DEPTH RAIL

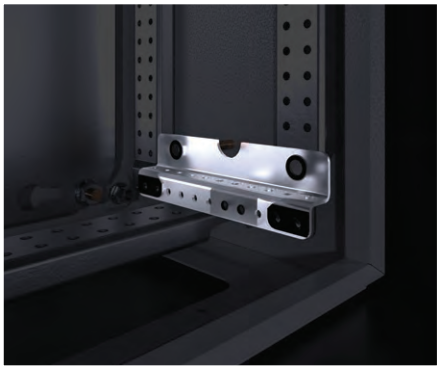

Relevance : DM-M / DM-L

Materials : 2 mm Galvanized

Supply Includes: 4 x Enclosure Depth Side Rail and Enclosure Assembly Parts

PRODUCT CODE	ENCLOSURE DEPTH(mm)
973.121	210
973.126	260
973.130	500
973.140	400

HEIGHT - WIDTH RAIL

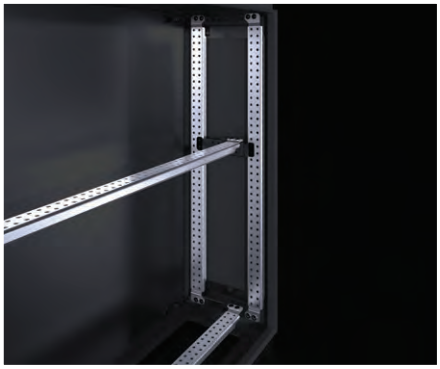

Relevance : DM-M / DM-L

Materials : 2 mm Galvanized

Supply Includes: 1 x Width or Height Profile and Enclosure Assembly Parts

NOTE : : 2 extra connection adapters are required for Width Usage. (please see 57) Usable at any height or width

PRODUCT CODE	ENCLOSURE HEIGHT/WIDTH (mm)
973.144	400
973.145	500
973.146	600
973.148	800
973.100	1000
973.120	1200

DEPTH INTERNAL RAIL

Relevance : DM-M / DM-L

Materials : 2 mm Galvanized

Supply Includes: 2 x Depth Internal Rail and Enclosure Assembly Parts

PRODUCT CODE	ENCLOSURE DEPTH (mm)
973.221	210
973.226	260
973.230	300
973.240	400

CONNECTION ADAPTOR

Product Code : **973.125 Relevance**

Relevance : DM-M / DM-L

Materials : 2 mm Galvanized

Supply Includes: 2 x Cable Connection Rails and Enclosure Assembly Parts

DM ENCLOSURE INTERIOR ASSEMBLY PRODUCTS

DIN RAILS

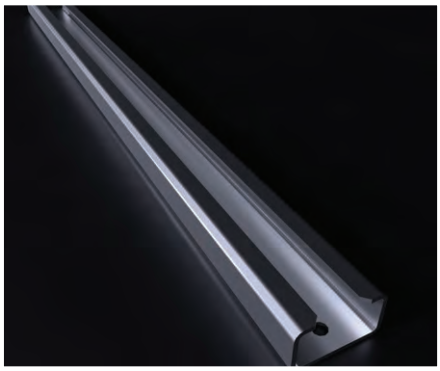

Relevance : KT and DM Series

Materials : 7.5mm RAIL: 1 mm Mild+ CR+3 Coating 15mm
RAIL: 1.5 mm Mild + CR+3 Coating

Supply Includes: 4 x Din Rails and Enclosure Assembly Parts.

REQUIRED : 993.105 M5X10 TAPTITE SCREW for H2000-Size product assembly (P.: 70)

NOTE : H2000-Size Products consist of 1x Din Rail

PRODUCT CODE	RAIL LENGTH (mm)	RAIL HEIGHT (mm)	Product Compatibility
956.003	195	15 mm	DM 300G Internal Partial Door
956.004	295	15 mm	DM 400G Internal Partial Door
956.005	395	15 mm	DM 500G Internal Partial Door
956.006	495	15 mm	DM 600G Internal Partial Door
956.008	695	15 mm	DM 800G Internal Partial Door
956.103	195	7,5 mm	DM 300G Internal Partial Door
956.104	295	7,5 mm	DM 400G Internal Partial Door
956.105	395	7,5 mm	DM 500G Internal Partial Door
956.106	495	7,5 mm	DM 600G Internal Partial Door
956.108	695	7,5 mm	DM 800G Internal Partial Door
990.100	2000	15 mm	DM , KT
990.102	2000	7,5 mm	DM , KT

RAIL RAISERS

Relevance : KT and DM Series

Materials : 2 mm Galvanized

Supply Includes: 2 x Rail Raisers and Enclosure Assembly Parts

PRODUCT CODE	PRODUCT
973.030	45-Degree Rail Raiser

Relevance : KT and DM Series

Materials : 2 mm Galvanized

Supply Includes: 2 x Rail Raisers and Enclosure Assembly Parts

PRODUCT CODE	PRODUCT
973.031	90-Degree Rail Raiser

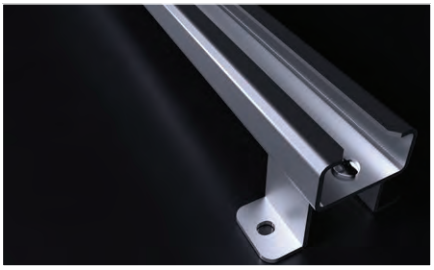

DM ENCLOSURE INTERIOR ASSEMBLY PRODUCTS

DOOR SWITCH

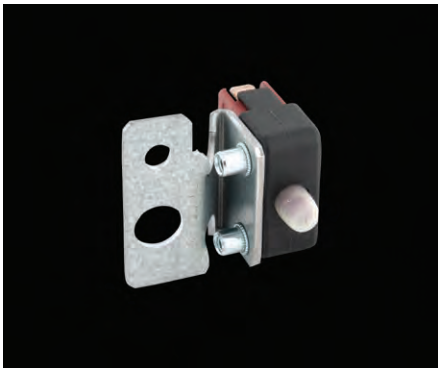

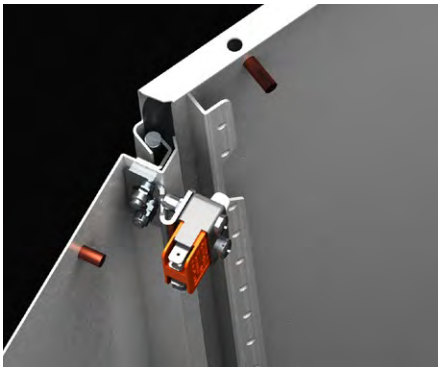

Product Code	: **973.141**
Relevance	: DM Series
Contact	: 1NO + 1NC
Contact Current (Le)	: 6 A (250 V AC)
IP Rate	: IP 40
Operating Temperature	: -25 °C / +80 °C
Supply Includes	: 1 x Switch, 1 x Bracket and Enclosure Assembly Parts

MAGNETIC LED LAMP 35 CM.

Product Code	: **901.150**
Materials	: Aluminum Body and Plastic Door
Supply Includes	: 1 x 35 cm. Magnetic Led Lamp and 1-meter 2-Pole connection cable

- Magnetic Assembly Structure
- 220 V AC, 5W Voltage and Power
- 400 Output Lumen

DM ENCLOSURE INTERNAL PANELS AND MODULES

MOUNTING PLATES

Relevance : KT - DM Series
Materials : 2 mm Galvanized
Supply Includes: 1 x Mounting Plate and Enclosure Assembly Parts

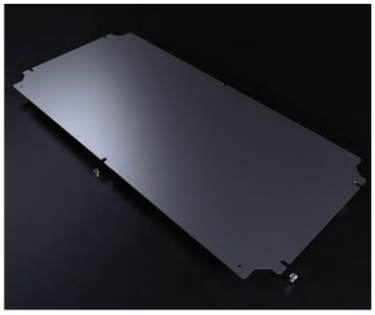

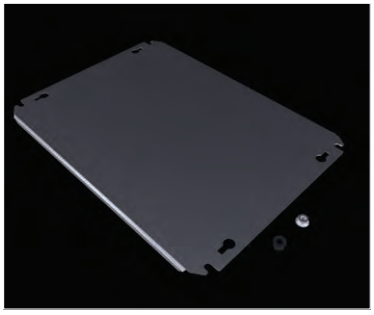

	PRODUCT CODE	Enclosure Width (mm)	Enclosure Height (mm)
KT SERIES	943.111	150	150
	943.121	200	150
	943.122	200	200
	943.131	300	150
	943.132	300	200
	943.142	400	200
	943.133	300	300
	943.141	400	150
	943.143	400	300
	943.144	400	400
	943.152	500	200
	943.153	500	300
	943.162	600	200
	943.163	600	300
	943.164	600	400
	943.182	800	200
	943.184	800	400
	943.183	800	300
	943.163	600	300
DM-S SERIES	943.222	200	200
	943.225	200	250
	943.220	250	250
	943.223	250	300
	943.253	250	350
	943.233	300	300
	943.234	300	400
	943.243	400	300
DM-M SERIES	943.334	400	400
	943.335	500	500
	943.344	400	400
	943.345	500	500
	943.346	600	600
	943.348	800	800
	943.354	400	400
	943.355	500	500
	943.356	600	600
	943.357	700	700
DM-L SERIES	943.364	600	400
	943.366	600	600
	943.368	600	800
	943.361	600	1000
	943.362	600	1200
	943.386	800	600
	943.388	800	800
	943.381	800	1000
	943.382	800	1200
	943.311	1000	1000
	943.312	1000	1200
	943.314	1000	1400
	943.318	1200	800
	943.322	1200	1200

DM ENCLOSURE INTERNAL PANELS AND MODULES

SOLID INTERIOR DOOR

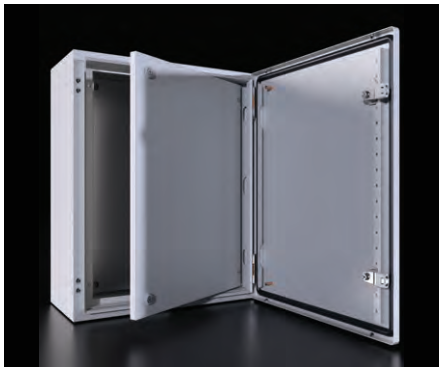

Relevance : DM-M / DM-L

Materials : 1,2 mm Mild + RAL 7035

Supply Includes: 1 x Solid Interior Door, 2 x Interior Door Vertical Profile, 2 x Bottom-Top Closure and Enclosure Assembly Parts

IP Rate : IP3XD ACCORDING TO IEC 60529

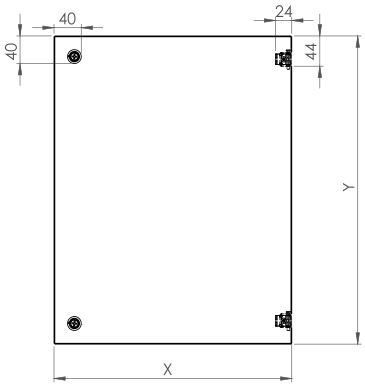

PRODUCT CODE	ENCLOSURE WIDTH (mm*)	ENCLOSURE HEIGHT (mm*)	X (mm*)	Y (mm*)
975.034	300	400	244	348
975.044	400	400	344	348
975.045	400	500	344	448
975.046	400	600	344	548
975.057	500	700	444	648
975.068	600	800	544	748
975.610	600	1000	544	948
975.612	600	1200	544	1148
975.810	800	1000	744	948
975.812	800	1200	744	1148

INTERIOR DOOR FOR MCB

Relevance : DM-M / DM-L

Materials : 1,2 mm DKP + RAL 7035

Supply Includes: 1 x Interior Door for MCB, 2 x Interior Door Vertical Profile, 2 x Top-Bottom Closure, Clips Terminal Rails Suitable for Interior Door and Enclosure Assembly Parts

IP Rate : IP3XC ACCORDING TO IEC 60529

PRODUCT CODE	ENCLOSURE WIDTH (mm*)	ENCLOSURE HEIGHT (mm*)	TOTAL MCB	NUMBER OF ROWS
973.034	300	400	22	2
973.044	400	400	34	3
973.045	400	500	51	3
973.046	400	600	68	4
973.057	500	700	110	5
973.068	600	800	162	6
973.610	600	1000	196	7
973.612	600	1200	224	8
973.810	800	1000	273	7
973.812	800	1200	312	8

DM ENCLOSURE INTERNAL PANELS AND MODULES

MODULAR INTERIOR DOOR SYSTEMS

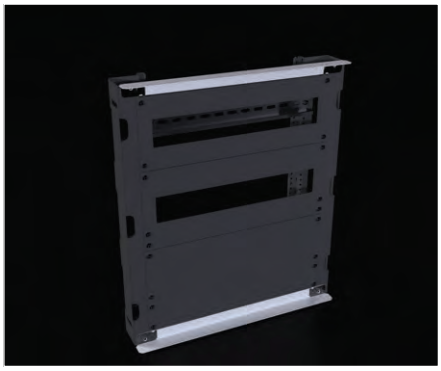

FRAME SET

Relevance : DM-M / DM-L

Materials : 1.2 Mild + RAL 7035 Coating

Supply Includes: 2 x Internal Partial Door Vertical Profile, Cover Frame Top - Bottom Closure and Enclosure Assembly Parts

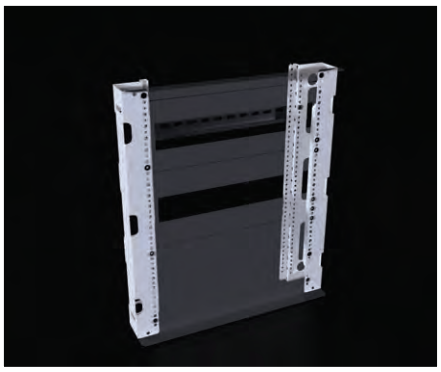

PRODUCT CODE	ENCLOSURE WIDTH (mm)	ENCLOSURE HEIGHT (mm)	X (mm)	Y (mm)
956.034	300	400	195	340
956.044	400	400	295	340
956.045	400	500	295	440
956.046	400	600	295	540
956.057	500	700	395	640
956.068	600	800	495	740
956.610	600	1000	495	940
956.612	600	1200	495	1140
956.810	800	1000	695	940
956.812	800	1200	695	1140

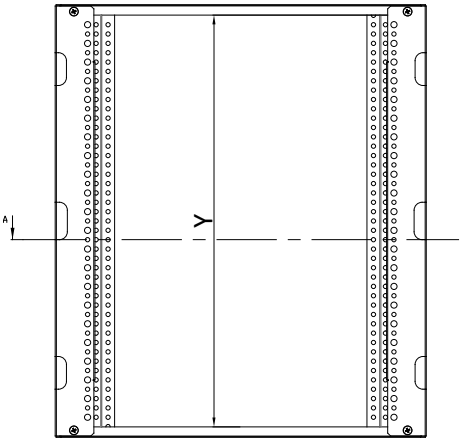

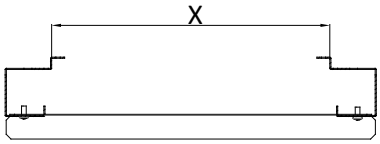

DM ENCLOSURE INTERNAL PANELS AND MODULES

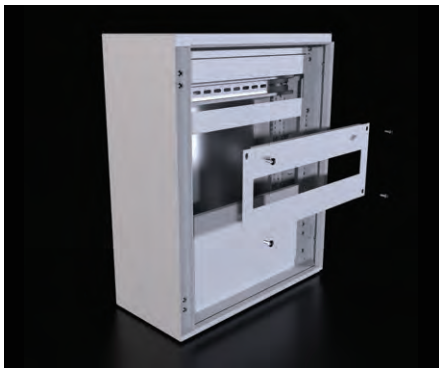

INTERNAL PARTIAL DOOR

Relevance : DM-M / DM-L

Materials : 1,2 Mild + RAL 7035 Coating

Supply Includes: 1 x Internal Partial Door and Enclosure Assembly Parts

PRODUCT CODE	Enclosure Width (W)	Cover Net Width (W1)	Cover Net Height (H1)	MCB
955.306	300	242,75	60	-
955.406	400	342,75	60	-
955.506	500	442,75	60	-
955.606	600	542,75	60	-
955.806	800	742,75	60	-
955.308	300	242,75	80	-
955.408	400	342,75	80	-
955.508	500	442,75	80	-
955.608	600	542,75	80	-
955.808	800	742,75	80	-
955.301	300	242,75	100	-
955.401	400	342,75	100	-
955.501	500	442,75	100	-
955.601	600	542,75	100	-
955.801	800	742,75	100	-
955.312	300	242,75	120	-
955.412	400	342,75	120	-
955.512	500	442,75	120	-
955.612	600	542,75	120	-
955.812	800	742,75	120	-
955.313	300	242,75	120	+
955.413	400	342,75	120	+
955.513	500	442,75	120	+
955.613	600	542,75	120	+
955.813	800	742,75	120	+
955.316	300	242,75	160	-
955.416	400	342,75	160	-
955.516	500	442,75	160	-
955.616	600	542,75	160	-
955.816	800	742,75	160	-
955.317	300	242,75	160	+
955.417	400	342,75	160	+
955.517	500	442,75	160	+
955.617	600	542,75	160	+
955.817	800	742,75	160	+
955.420	400	342,75	200	-
955.520	500	442,75	200	-
955.620	600	542,75	200	-
955.820	800	742,75	200	-

PARTIAL MOUNTING PLATE

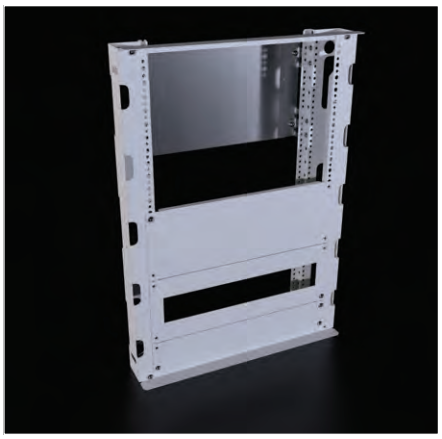

Relevance : DM - M / DM - L / TEOS / NEO / NEO Mb

Materials : 2 mm Galvanized

Supply Includes: 1 x Partial Mounting Plate

REQUIRED : For DM - M / DM - L;
4 x plug-in rail holders and 4 x Mounting Plate Side Rail are needed to mount the Mounting Plate
944.420 (x 100) (with bolts)
944.421 (x 12) (with bolts)
956.001 (x 4) (with bolts)

PRODUCT CODE	ENCLOSURE WIDTH (W)	PLATE NET WIDTH (W1)	PLATE NET HEIGHT (H1)
944.442	400	295	150
944.443	400	295	175
944.444	400	295	200
944.445	400	295	250
944.446	400	295	300
944.447	400	295	400
944.448	400	295	500
944.449	400	295	600
944.450	500	395	400
9444.51	600	495	150
944.452	600	495	175
944.453	600	495	200
944.454	600	495	250
944.455	600	495	300
944456	600	495	400
944.457	600	495	500
944.458	600	495	600
944.467	800	695	150
944.468	800	695	175
944.469	800	695	200
944.470	800	695	250
944.471	800	695	300
944.472	800	695	400
944.473	800	695	500
944.474	800	695	600

DM ENCLOSURE INTERNAL PANELS AND MODULES

PARTIAL MOUNTING PLATE SIDE RAIL

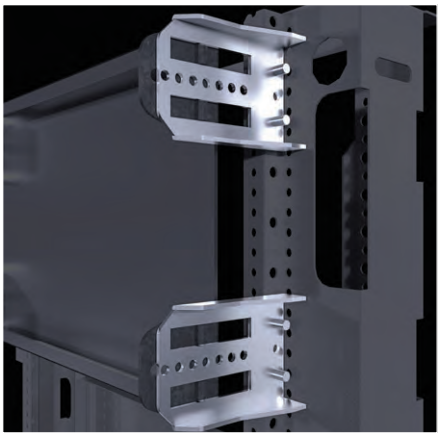

Product Code : **956.001**

Relevance : DM - M DM - L

Materials : 2 mm Galvanized

Supply Includes: 4 x Partial Mounting Plate Side Rail and Enclosure Assembly Parts

PLUG-IN RAIL HOLDER

Product Code : **944.421**
944.420

Relevance : TEOS / NEO Modular / NEO Mb / DM - M / DM - L

Materials : 2 mm. Mild + Zinc-Coating

Supply Includes: 944.420 (x 12, With Bolts)
944.420 (x 100, With Bolts)

ALUMINUM TERMINAL RAIL

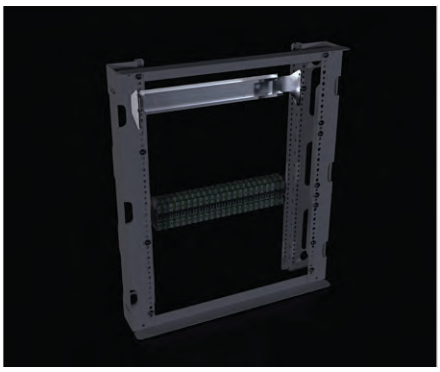

Relevance : DM-M / DM-L

Materials : Etial 160 AL

Supply Includes: Aluminum Terminal Rail and Assembly Parts
(Aluminum Terminal Rail for DM Inner Covers)

REQUIRED : A frame set is required for using aluminum terminal rails.
(please see p. 62)

PRODUCT CODE	ENCLOSURE WIDTH	RAIL LENGTH (A)
956.400	400	263
956.500	500	363
956.600	600	463
956.800	800	663

DOOR SUPPORT RAILS

Relevance : DM-M, DM-L

Materials : 1,5 mm. Galvanized

Supply Includes: 1 x Door Support Rail and Assembly Parts

PRODUCT CODE	RAIL LENGTH (Z)	DM DOOR SUPPORT RAIL	DM COMPATIBLE PRODUCT CODE							
973.023	343	400 G	254.315	254.421	254.515	254.521	254.526	254.530	254.621	254.615
			254.626	254.630	254.830	-	-	-	-	-
973.024	443	500 G 1000 G - V1	255.421	255.521	255.530	255.615	255.621	255.626	255.630	255.721
			255.726	281.130	-	-	-	-	-	-
973.025	383	1000 G - V2	281.123	281.143	281.144	-	-	-	-	-
973.026	543	600 G - 1200 G - V1	256.421	256.621	256.630	256.640	256.821	256.826	256.830	256.840
			256.126	256.130	286.140	281.830	281.840	-	-	-
973.027	483	1200 G - V2	256.123	286.124	281.230	281.140	-	-	-	-
973.028	743	800 G - V1	258.630	258.632	258.821	258.830	258.126	258.130	288.140	-
973.029	683	800 G - V2	258.123	288.124	-	-	-	-	-	-

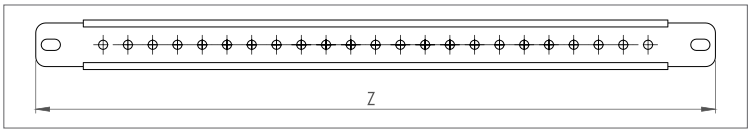

METAL PLAN POCKET

Relevance : DM-M / DM-L

Materials : 1.2 mm. Mild + RAL 7035 Coating

Supply Includes: 1 x Plan Pocket Set and Enclosure Assembly Parts

PRODUCT CODE	ENCLOSURE WIDTH (mm)
973.442	400-500-1000
973.542	600-1200
973.742	800

DOORS AND COVERS

PLASTIC PLAN POCKET

Relevance : DM-M / DM-L

Materials : ABS RAL 7035

Supply Includes: 1 x Plan Pocket Set and Enclosure Assembly Parts

PRODUCT CODE	DIMENSIONS
994.400	A4
994.500	A5

DOOR STOPPER

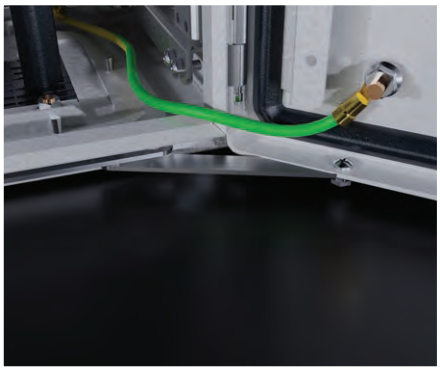

Product Code : **973.142**

Relevance : DM-M / DM-L

Materials : 2 mm. Mild + CR+3 Coating

Supply Includes: 1 x Door Stopper and Enclosure Assembly Parts

SMALL LOCK INSERT OPTIONS

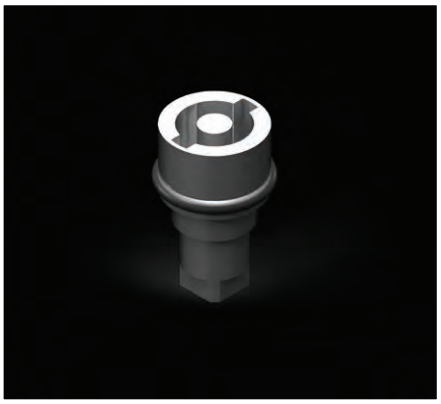

5 mm Doublebit Insert Lock

Square Insert Lock

9 mm Triangular Insert Lock

Relevance : Quarter-Turn Locks

Materials : Zamak + Nickel-Coated Product

Supply Includes: 1 x Insert

REQUIRED : The key should be ordered separately. (p. 69)

PRODUCT CODE	MODEL
951.260	5 mm Double-bit
951.261	8 mm Square
951.262	9 mm Triangular

ENCRYPTED CYLINDRICAL LOCK

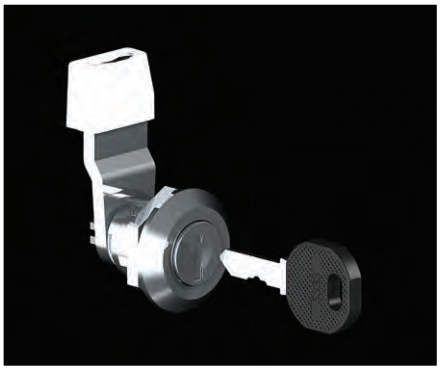

Relevance : 950.212 (DM-S), 950.211 (DM-M/DM-L)

Materials : Zamak + Zinc-Coating

Supply Includes: 1 x Encrypted Cylindrical Lock and Key

T-HANDLE LOCK

Relevance : 950.210

Materials : Zamak + Black Coating

Supply Includes: 1 x T-Handle Lock and Key

LOCKS

HANDLE LOCK

Relevance : DM-M / DM-L

Materials : Zamak + RAL 7035 Supply

Supply Includes: 1 x Handle Lock

REQUIRED : The key should be ordered separately for doublebit, triangular and square insert models.

PRODUCT CODE	MODEL
950.203	5 mm Double-bit
950.202	8 mm Square
950.201	9 mm Triangular
950.200	Eurokey (5333)

KEYS

Relevance : All Lock Systems

Materials : Zamak + Zinc-Coating

Supply Includes: 1 x Eurokey Key: 2 x

PRODUCT CODE	MODEL
952.101	5 mm Double-bit
952.102	8 mm Square
952.103	9 mm Triangular
952.300	Eurokey (5333)

SELF-TAPPING SCREWS

5X10 TAPTITE SCREW

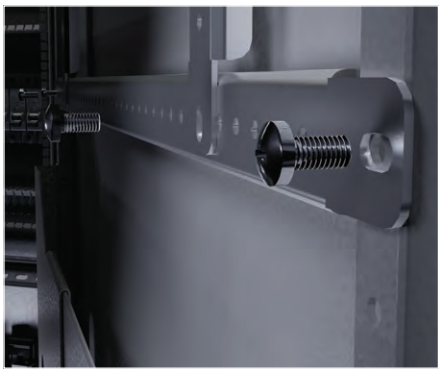

Product Code : **993.105**

Supply Includes: 100 x Screws

Self-tapping steel screw in holes with 4.50 mm diameter

M4,8X9,5 FLAT-TIP STEEL SCREW

Product Code : **993.110**

Supply Includes: 20 x Screws

Used as DM-M Gland Plate Mounting Screw

SELF-DRILLING SCREW

Product Code : **993.106**

Supply Includes: 100 x Screws

Self-Drilling and Self-Tapping Screws

MOUNTING ACCESSORIES

EARTHING CABLES

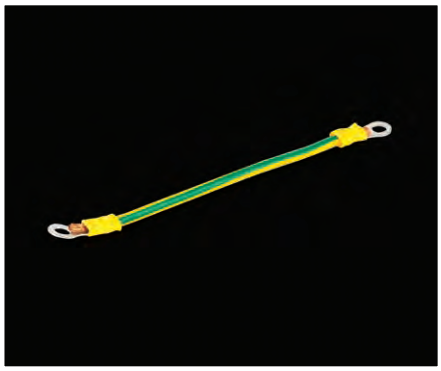

YELLOW GREEN EARTHING CABLE

PRODUCT CODE	DIMENSIONS	PACKAGE QUANTITY	DIAMETER	ENCLOSURE DEPTH (mm)
991.208	16mm² x 210mm	5 x	M8	150/210
991.209	16mm² x 260mm	5 x	M8	260/300
991.210	16mm² x 310mm	5 x	M8	400

KNITTED EARTHING CABLE

PRODUCT CODE	DIMENSIONS	PACKAGE QUANTITY	DIAMETER	ENCLOSURE DEPTH (mm)
991.203	12x3x260	1 x	M8	150/210/260/300
991.201	12x3x260	10 x	M8	150/210/260/300
991.204	15x3x260	1 x	M8	150/210/260/300
991.202	15x3x260	5 x	M8	150/210/260/300

AIR FILTERS

Materials : ABS RAL 7035
IP Rate : IP5X
Supply Includes: 1 x Air Filter, Replaceable Fiber Filter

PRODUCT CODE	Filter Dimensions	Enclosure Depth (mm)
983.104	105x105	150-400
983.106	150x150	210/260/300/400

FAN WITH AIR FILTERS

Materials : ABS RAL 7035
FAN : EBM Brand
IP Rate : IP5X
Supply Includes: 1 x Air Filter and Fan Replaceable Fiber Filter

PRODUCT CODE	Filter Dimensions	Fan Power	Air Flow Rate (m^3/saat)	Enclosure Depth (mm)
983.119	105x105	230V AC-12W	20m^3	150-400
983.131	150x150	230V AC-19W	60m^3	210/260/300/400

RAIN CANOPY FOR AIR FILTER

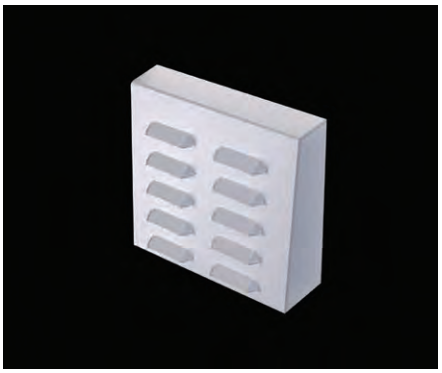

Materials : 1,5 mm. Galvanized + RAL 7035
IP Rate : IPX3
Supply Includes: Ventilation, Gauge and Enclosure Assembly Parts for 1 x Rain Canopy

PRODUCT CODE	Compatible Filter Size	Canopy Size	Enclosure Depth (mm)
973.105	105x105	155x145	210/260/300/400
973.150	150x150	200x190	210/260/300/400

ENCLOSURE HEATERS

Heating Component : PTC Semi Conductor
Heating Body : Anodized Aluminum Profile
Body Temperature : 75-130 °C
IP Rate : IP20
Connection 0.75 - 1.50 mm^2, with screw terminal

- 110-230 V AC/DC
- Conforms to the CE Norm
- Mounting on 35 mm DIN rails with clips

PRODUCT CODE	Power (W)	Body Temperature	Width (mm)	Height (mm)	Depth (mm)
984.100	20	85	82	65	42
984.200	30	85	82	75	42
984.300	50	85	82	85	42
984.400	75	125	82	105	42
984.500	100	125	82	120	42
984.600	125	125	82	150	42
984.700	150	125	82	190	42

AIR CONDITIONING

THERMOSTATS

FAN THERMOSTAT

Product Code : **983.011**

Supply Includes : 1 x Fan Thermostat

IP Rate : IP20

Sensor Component: Bimetallic Thermostat

- Conforms to the CE Norm
- Mounting on 35 mm DIN rails
- 0.75-1.50mm² connection
- With Normally Open Contact (NO)

HEATER THERMOSTAT

Product Code : **983.012**

Supply Includes : 1 x Heater Thermostat

IP Rate : IP20

Sensor Component: Bimetallic Thermostat

- Conforms to the CE Norm
- Mounting on 35 mm DIN rails
- 0.75-1.50mm² connection
- With Normally Closed Contact (NC)
- 110-230 V AC/DC 10A

H YGROSTAT

Product Code : **983.013**

Supply Includes : 1 x Hygrostat

IP Rate : IP20

Sensor Component: Bimetallic Thermostat

- Conforms to the CE Norm
- Mounting on 35 mm DIN rails
- 0.75-1.50mm² connection
- With Both Normally Open and Normally Closed Contacts (NO/NC)
- For both cooling and heating applications.
- 110-230 V AC/DC 10A

EMERSON
EMERSON

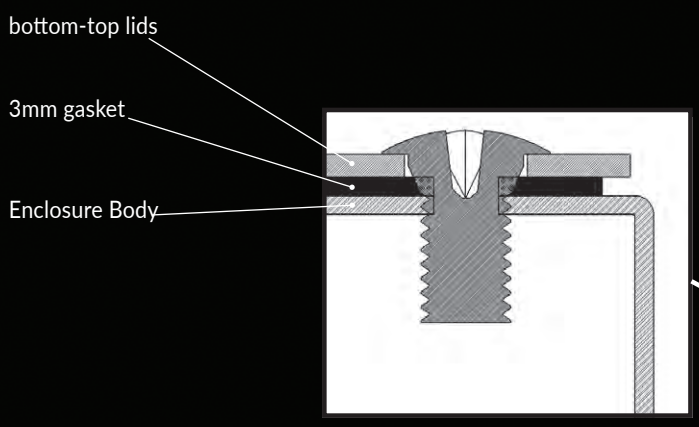
bottom-top lids
3mm gasket
Enclosure Body

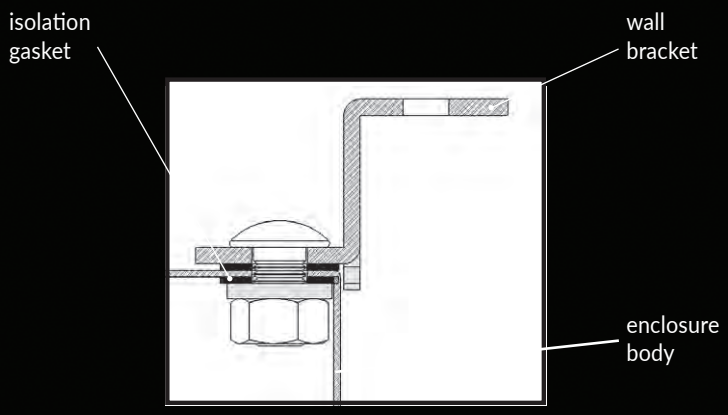
isolation
gasket
wall
bracket
enclosure
body

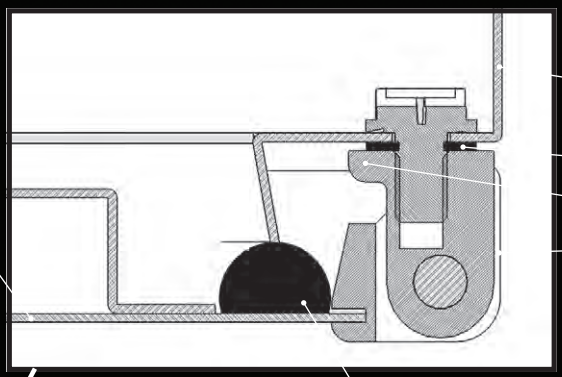

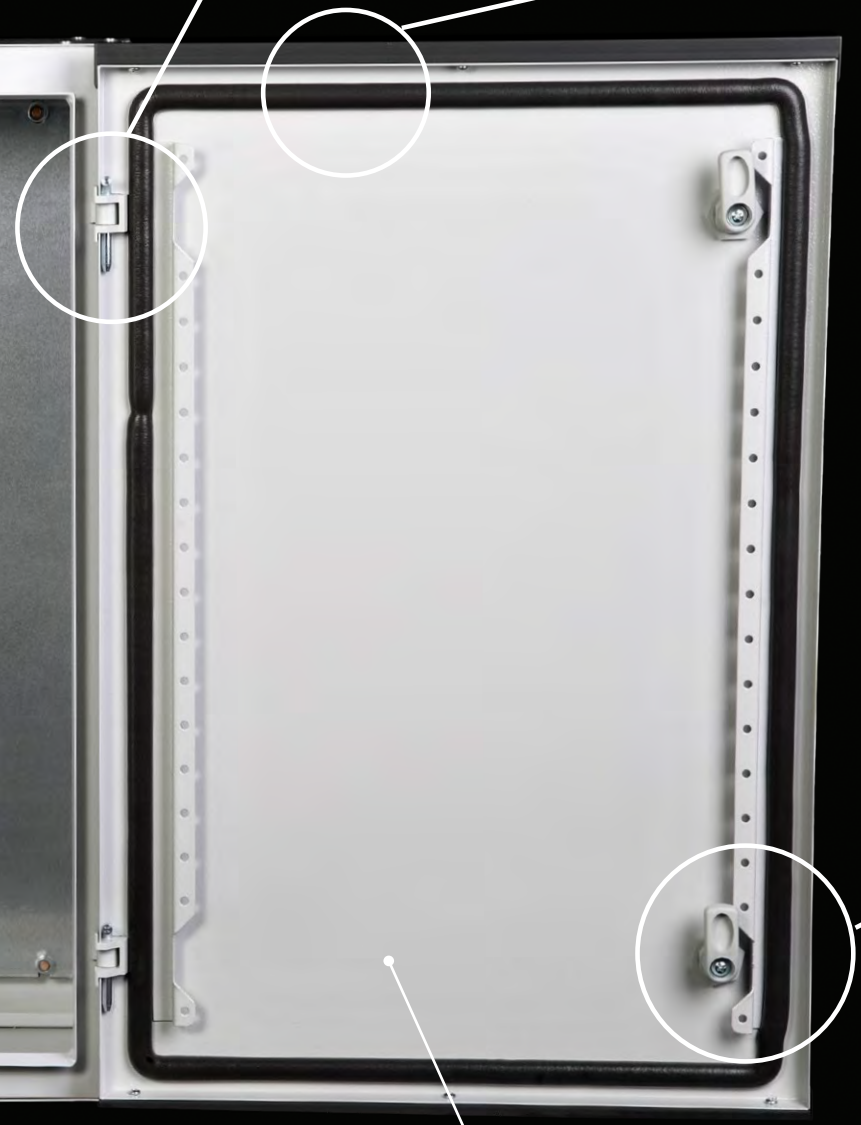

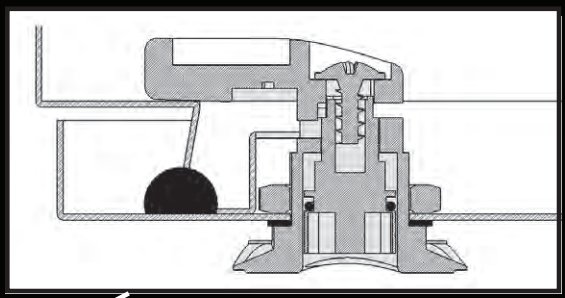

500 hours of foggy salt resistance test
Homogeneous coating dispersion

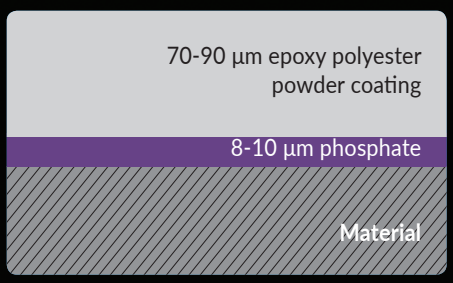

ARES SOLID DOOR with MOUNTING PLATE

Material	: Enclosure and parts, door	: 1,00 - 1,50 mm mild steel
	Mounting plate	: 1,50 – 2,00 mm Galvanized steel
Surface Process	: Mild Steel Parts	: Iron-phosphate plated, RAL7035 Rough Epoxy, polyester powder-coating
	Mounting Plate	: Galvanized
IP Rate	: IP 66, (EN 60 529)	
Supply Includes	: 1 pcs body,1 set bottom-top lid, 1 pcs front door, 2 pcs support rails, 1 pcs door key, 1 pcs mounting plate	

Please see page 268 for technical drawings.

ACCESSORIES:

Knitted Earthing Cable p.: 91

Wall Bracket p.: 91

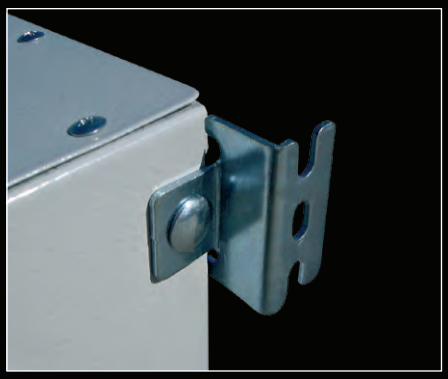

Other Accessories p.: 86

ARES SOLID DOOR with MOUNTING PLATE

PRODUCT CODE	WIDTH (W)	HEIGHT (H)	DEPTH (D)	W2 (mm)	H2 (mm)	LOCK	HINGE	WEIGHT (kg)
101.250*	300	400	150	249	334	1	2	5,5
101.251*	300	400	200	249	334	1	2	6
101.252*	400	400	200	349	334	1	2	7,5
101.253*	400	500	200	349	414	1	2	9
101.254	400	600	200	349	534	2	2	10,5
101.255	400	600	280	349	534	2	2	11,8
101.265	500	500	200	449	434	2	2	11,4
101.266	500	500	280	449	434	2	2	13,4
101.256	500	600	200	449	534	2	2	13,1
101.257	500	700	200	449	634	2	2	14,9
101.258	500	700	280	449	634	2	2	16,5
101.259	600	800	200	549	734	2	2	19,5
101.260	600	800	280	549	734	2	2	21,3
101.261	600	1000	280	549	934	2	3	34,1
101.262	600	1150	280	549	1084	3	3	36,4
101.267	800	800	200	749	734	2	2	24,6
101.268	800	v800	280	749	734	2	2	27,9
101.263	800	1000	280	749	934	2	3	40,7
101.264	800	1150	280	749	1084	3	3	46,1

* Marked codes do not include support rails.

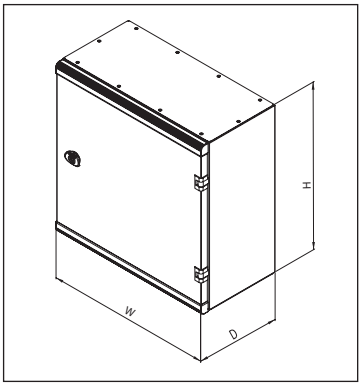

Catalogue

ARES SOLID DOOR, without MOUNTING PLATE

Material	: Enclosure and parts, door : 1,00 – 1,50 mm mild steel
Surface Process	: Mild Steel Parts : Iron-phosphate plated, RAL7035 Rough Epoxy, polyester powder-coating
IP Rate	: IP 66, (EN 60 529)
Supply Includes	: 1 pcs body, 1 set bottom-top lid, 1 pcs front door, 2 pcs door support rail, 1 pcs door key.

Please see page 268 for technical drawings.

ACCESSORIES:

Knitted Earthing Cable p.: 91

Wall Bracket p.: 91

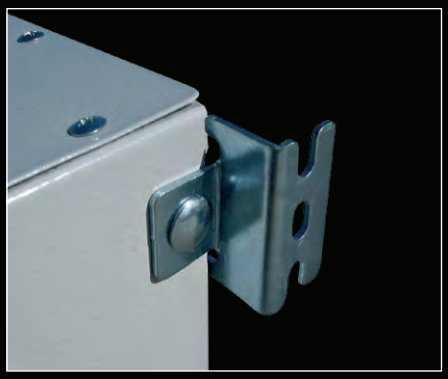

Other Accessories p.: 86

ARES SOLID DOOR, without MOUNTING PLATE

PRODUCT CODE	WIDTH (W)	HEIGHT (H)	DEPTH (D)	LOCK	HINGE	WEIGHT (kg)
101.250	300	400	150	249	334	1
101.251	300	400	200	249	334	1
101.252	400	400	200	349	334	1
101.253	400	500	200	349	343	1
101.254	400	600	200	349	534	2
101.255	400	600	280	349	534	2
101.265	500	500	200	449	434	2
101.266	500	500	280	449	434	2
101.256	500	600	200	449	534	2
101.257	500	700	200	449	634	2
101.258	500	700	280	449	634	2
101.259	600	800	200	549	734	2
101.260	600	800	280	549	734	2
101.261	600	1000	280	549	934	2
101.262	600	1150	280	549	1084	3

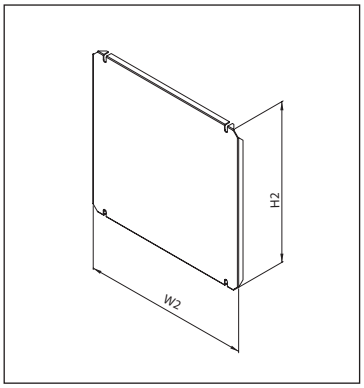

Catalogue

ARES GLAZED DOOR with MOUNTING PLATE

Material	: Enclosure and parts, door	: 1,00-1,50 mm mild steel
	Mounting plate	: 1,50 – 2,00 mm Galvanized steel
Surface Process	: Mild steel parts	: Iron-phosphate plated, RAL7035 Rough Epoxy, polyester powder-coating
	Mounting plate	: Galvanized Steel
IP Rate	: IP 55, (EN 60 529)	
Supply Includes	: 1 pcs body, 1set bottom-top lid, 1 pcs front glazed door, 2 pcs support rails, 1 pcs door key ,1 pcs mounting plate	

Please see page 268 for technical drawings.

ACCESSORIES:

Knitted Earthing Cable p.: 91

Wall Bracket p.: 91

Other Accessories p.: 86

ARES GLAZED DOOR with MOUNTING PLATE

PRODUCT CODE	WIDTH (W)	HEIGHT (H)	DEPTH (D)	G2 (mm)	Y2 (mm)	LOCK	HINGE	WEIGHT (kg)
101.453	400	500	200	349	434	1	2	8,8
101.454	400	600	200	349	534	2	2	10,2
101.455	400	600	280	349	534	2	2	11,5
101.456	500	600	200	449	534	2	2	12,2
101.457	500	700	200	449	634	2	2	13,9
101.458	500	700	280	449	634	2	2	15,5
101.459	600	800	200	549	734	2	2	18
101.460	600	800	280	549	734	2	2	19,8
101.461	600	1000	280	549	934	2	3	31,5
101.462	600	1150	280	549	1084	3	3	33,1
101.463	800	1000	280	749	934	2	3	36,5
101.464	800	1150	280	749	1084	3	3	41,2

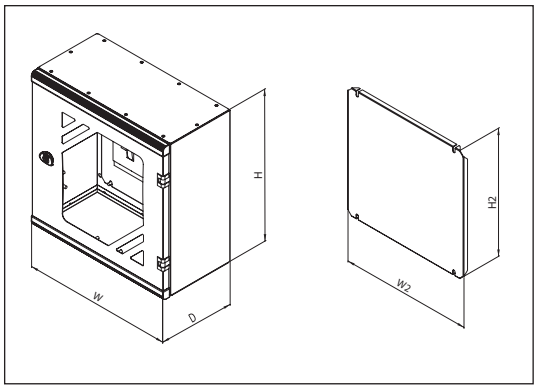

Catalogue

ARES GLAZED DOOR without MOUNTING PLATE

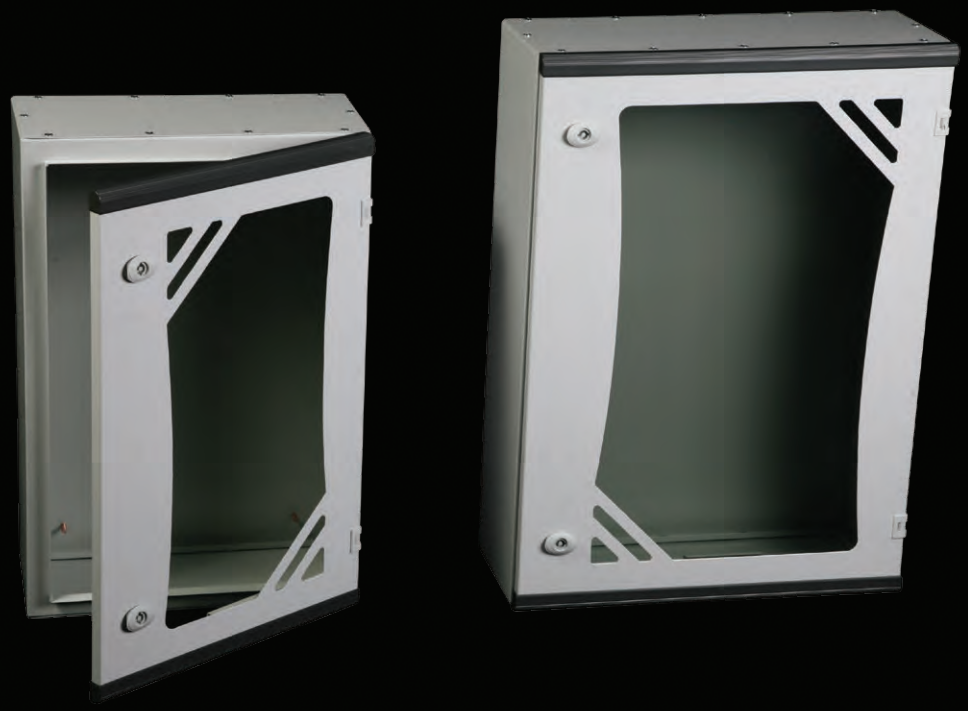

Material	: Enclosure and parts, door : 1,00- 1,50 mm mild steel	
Surface Process:	: Mild steel parts	: Iron-phosphate plated, RAL7035 Rough Epoxy, polyester powder-coating
IP Rate	: IP 55, (EN 60 529)	
Supply Includes	: 1 pcs body, 1 set bottom-top lid,1 pcs front glazed door, 2 pcs support rails, 1 pcs door key	

Please see page 268 for technical drawings.

ACCESSORIES:

Knitted Earthing Cable p.: 91

Wall Bracket p.: 91

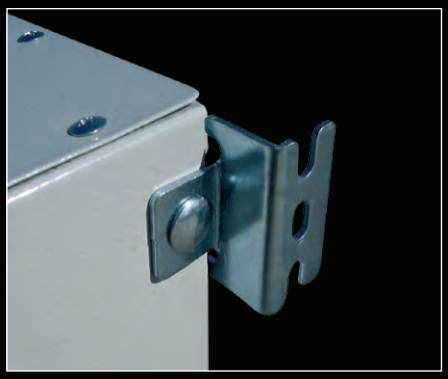

Other Accessories p.: 86

ARES GLAZED DOOR without MOUNTING PLATE

PRODUCT CODE	WIDTH (W)	HEIGHT (H)	DEPTH (D)	LOCK	HINGE	WEIGHT (kg)
101.553	400	500	200	1	2	6,8
101.554	400	600	200	2	2	7,8
101.555	400	600	280	2	2	9,1
101.556	500	600	200	2	2	9,2
101.557	500	700	200	2	2	10,3
101.558	500	700	280	2	2	11,9
101.559	600	800	200	2	2	12,9
101.560	600	800	280	2	2	14,7
101.561	600	1000	280	2	3	21,0
101.562	600	1150	280	3	3	23,3
101.563	800	1000	280	2	3	25,0
101.564	800	1150	280	3	3	27,9

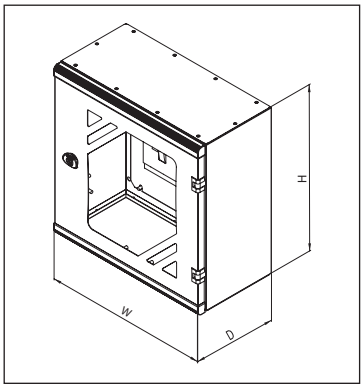

Catalogue

MAIN INTERIOR SUPPORT RAILS

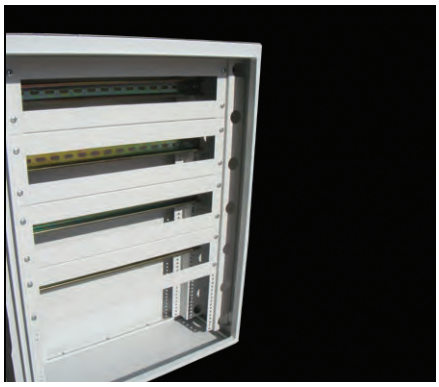

Material : Mild steel, RAL7035 powder-coating.

Supply includes : 2 pcs support rails and assembly parts.

	ENCLOSURE	
PRODUCT CODE	HEIGHT (H)	VERTICAL PROFILE HEIGT
943.801	400	340
943.802	500	440
943.803	600	540
943.804	700	640
943.805	800	740
943.806	1000	940
943.807	1150	1090

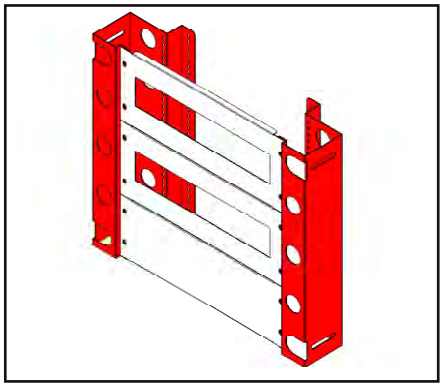

INTERIOR MOUNTING RAILS

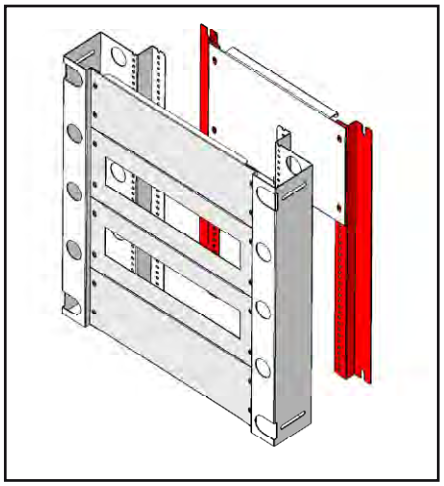

Material : Mild steel, RAL7035 powder-coating.

Supply includes : 2 pcs rails and assembly parts.

PRODUCT CODE	ENCLOSURE HEIGHT (H)
943.810	400
943.811	500
943.812	600
943.813	700
943.814	800
943.815	1000
943.816	1150

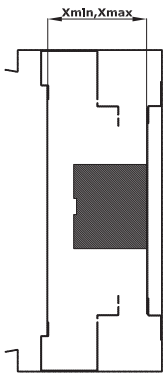

X min. Depth 200 mm : 93 mm
Depth 280 mm : 173 mm

X max. Depth 200 mm : 183 mm
Depth 280 mm : 213 mm

ARES ACCESSORIES AND EQUIPMENTS

INTERIOR MOUNTING PLATE

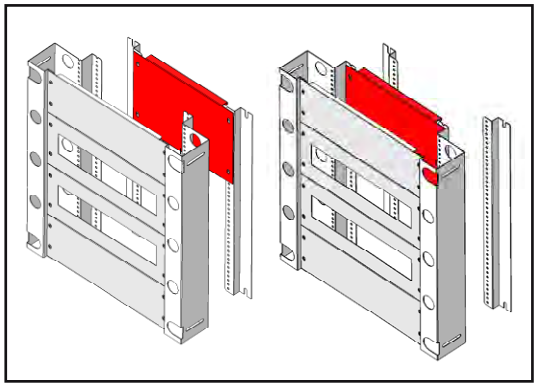

Material : Galvanized steel

Supply includes : 1 pcs mounting plate and assembly parts

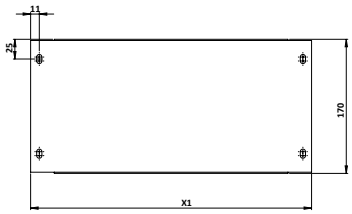

	ENCLOSURE		
PRODUCT CODE	WIDTH	HEIGT	X1 (mm)
944.406	300	170	156
944.402	400	170	256
944.403	500	170	356
944.404	600	170	456
944.405	800	170	656

INTERIOR COVER PLATES

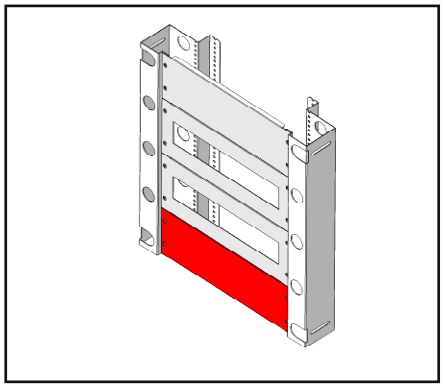

Material : Mild steel, RAL 7035 powder-coating.

Supply includes : 1 pcs plate and assembly parts

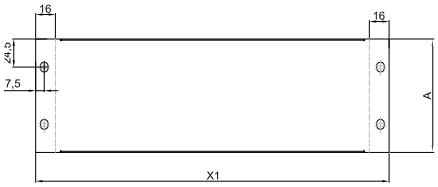

	ENCLOSURE		
PRODUCT CODE	WIDTH	A (mm)	X1 (mm)
943.870	300	80	208
943.820		100	208
943.821		120	208
943.822		160	208
943.871	400	80	308
943.823		100	308
943.824		120	308
943.825		160	308
943.872		200	308
943.873	500	80	408
943.826		100	408
943.827		120	408
943.828		160	408
943.874		200	408
943.875	600	80	508
943.829		100	508
943.830		120	508
943.831		160	508
943.876		200	508
943.877	800	80	708
943.832		100	708
943.833		120	708
943.834		160	708
943.878		200	708

INTERIOR COVER PLATE FOR MCB

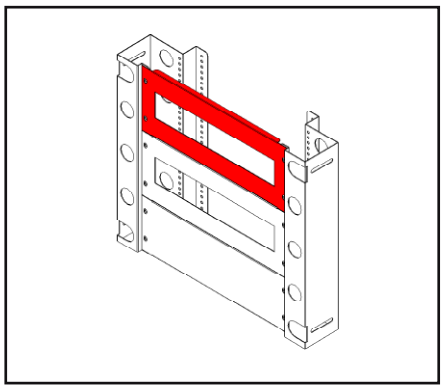

Material : Mild steel, RAL 7035 powder-coating.

Supply includes : 1 pcs plate and assembly parts

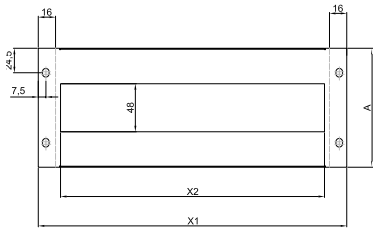

	ENCLOSURE				
PRODUCT CODE	WIDTH	A (mm)	X1 (mm)	X2	SWITCH CAP.
943.835	300	120	208,5	163	9
943.836		160	208,5	163	9
943.837	400	120	308,5	253	14
943.838		160	308,5	253	14
943.839	500	120	408,5	361	20
943.840		160	408,5	361	20
943.841	600	120	508,5	469	26
943.842		160	508,5	469	26
943.843	800	120	708,5	667	37
943.844		160	708,5	667	37

COMPLETE INTERIOR DOOR SYSTEM

SOLID INTERIOR DOOR

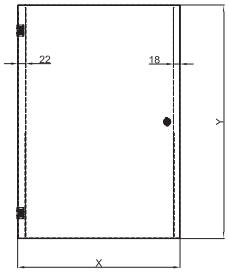

PRODUCT CODE	ENCLOSURE			
	WIDTH (W)	HEIGHT (H)	X (mm)	Y (mm)
943.845	300	400	239	232
943.846	400	400	339	232
943.847		500	339	432
943.848		600	339	532
943.849	500	600	439	532
943.850		700	439	632
943.851	600	800	539	732
943.852		1000	539	932
943.853		1150	539	1082
943.854	800	1000	739	932
943.855		1150	739	1082

INTERIOR DOOR FOR MCB

Material : Mild steel, RAL7035 powder-coating

Supply includes : 1 set hinge, 1 pcs locked interior door and support rails.

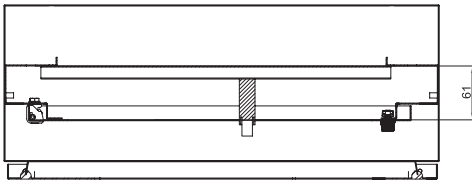

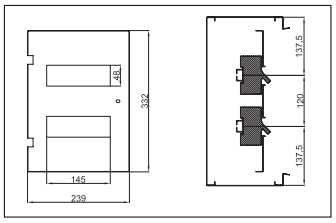

Enclosure W300 x H400 mm
Product Code: **943.856**

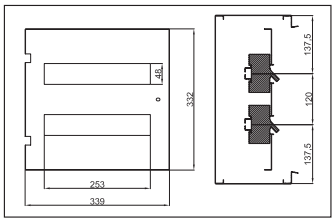

Enclosure W400 x H400 mm
Product Code: **943.857**

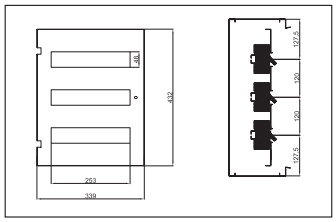

Enclosure W400 x H500 mm
Product Code: **943.858**

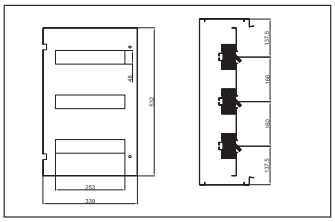

Enclosure W400 x H600 mm
Product Code: **943.859**

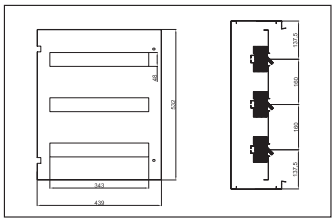

Enclosure W500 x H600 mm
Product Code: **943.860**

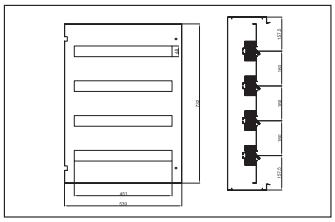

Enclosure W600 x H800 mm
Product Code: **943.862**

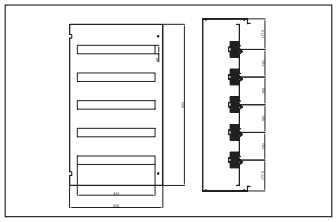

Enclosure W600 x H1000 mm
Product Code: **943.863**

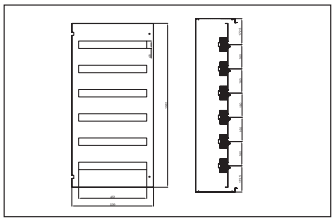

Enclosure W600 x H1150 mm
Product Code: **943.864**

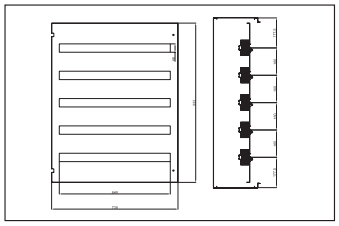

Enclosure W800 x H1000 mm
Product Code: **943.865**

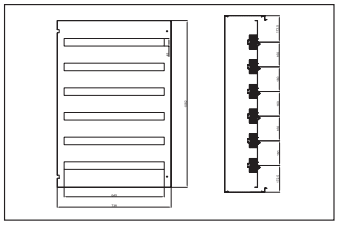

Enclosure W800 x H1150 mm
Product Code: **943.866**

ARES ACCESSORIES AND EQUIPMENTS

19” SWING FRAME

Material : Mild steel, RAL7035 powder-coating.

Supply includes : 1 pcs hinged, locked swing frame and support rails.

	ENCLOSURE		
PRODUCT CODE	WIDTH (W)	HEIGHT (H)	U
943.867	600	800	14
943.868	600	1000	18
943.869	600	1150	22

ARES PLINTH

Material : Mild Steel, RAL 7035 powder coating

Supply includes : 1 pcs plinth, lids and assembly parts

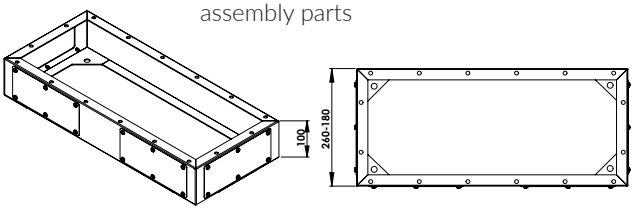

	ENCLOSURE	
PRODUCT CODE	WIDTH	HEIGHT
915.106	500	200
915.107	500	280
915.108	600	200
915.109	600	280
915.110	800	280

GLAND PLATE WITH FOAM ISOLATION

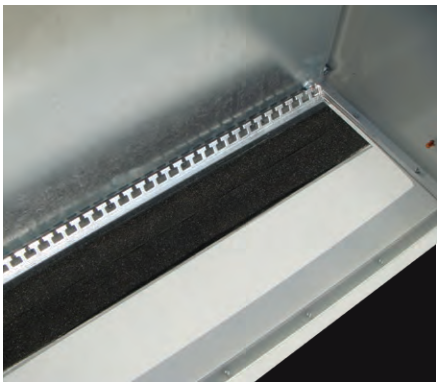

Material : Mild Steel, RAL 7035 powder coating and EPDM foam gasket

Supply includes : Gland plate, press part and gasket

	ENCLOSURE	
PRODUCT CODE	WIDTH	HEIGHT
925.101	500	200
925.102	500	280
925.103	600	200
925.104	600	280
925.105	800	280

CABLE CLAMP RAIL

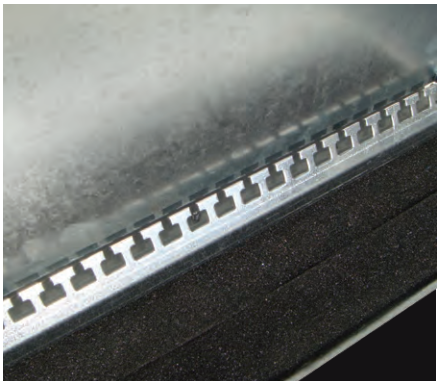

Material : Galvanizeded Steel

Supply includes : 1 pcs rail and assembly parts

PRODUCT CODE	ENCLOSURE WIDTH
997.121	500
997.122	600
997.123	800

RAIN CANOPY

Material : Galvanized steel, RAL 7035 powder-coating

Supply includes : 1 pcs rain canopy, 1 pcs special assembly plate and assembly parts

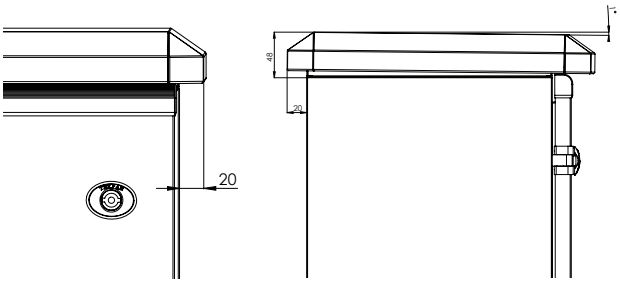

	ENCLOSURE	
PRODUCT CODE	WIDTH	DEPTH
934.101	300	200
934.102	400	200
934.103		280
934.104	500	200
934.105		280
934.106	600	200
934.107		280
934.108	800	280

PLINTH FOR OUTDOOR USE

Material : Galvanized steel, RAL 7035 powder-coating

Supply includes : 1 pcs outdoor plinth and assembly parts

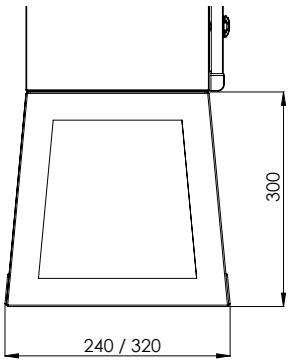

	ENCLOSURE	
PRODUCT CODE	WIDTH	DEPTH
915.101	500	200
915.102	500	280
915.103	600	200
915.104	600	280
915.105	800	280

DOOR RAIL (For Mounting Cable Duct)

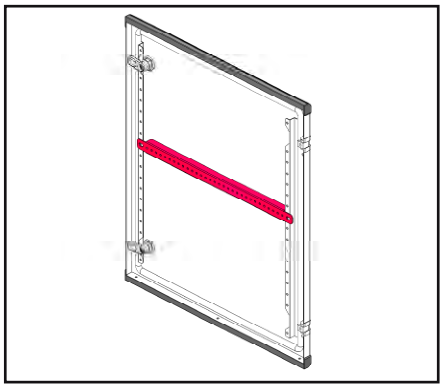

Material : Galvanized steel

Supply includes : 1 pcs door rail and assembly parts

PRODUCT CODE	ENCLOSURE WIDTH
997.201	400
997.203	500
997.204	600
997.205	800

ARES ACCESSORIES AND EQUIPMENTS

KNITTED EARTHING CABLE

Product Code: 991.201
Quantity : 10
Length : 260 mm

Product Code: 991.204
Quantity : 1
Length : 260 mm

Assembly screws are not included.

WALL BRACKET

Product Code: 971.100
Quantity : 4 pcs wall bracket, screws and gaskets

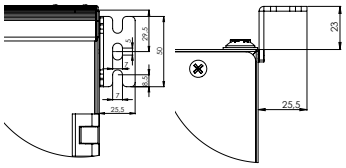

MCB RAIL (H15)

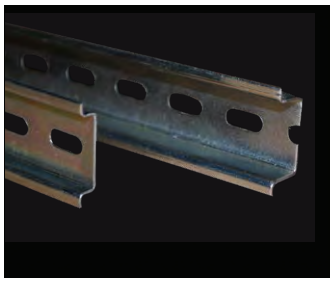

Product Code: 990.100
990.102
Quantity : 1
Length : 7,5 mm

MCB BLANK PLATE

Product Code: 990.101
Quantity : 1
Length : 175 mm

LAMP RAIL

Product Code: 903.151-500G
903.152-600G
903.153-800G
Quantity : 1 pc, screws
Length : 2 m

LAMP 230V

PRODUCT CODE	Watt	Length
901.110	6 W	
901.130	4 W	LED 30 cm
901.140	7 W	LED 57 cm

Lamp rail is required for assembling.

SPECIAL LOCK INSERTS

TRIANGLE INSERT

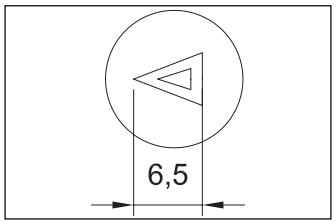

Product Code: 951.211
Quantity : 1

SQUARE INSERT

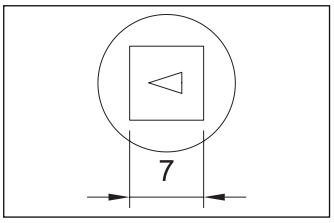

Product Code: 951.212
Quantity : 1

SPECIAL KEYS

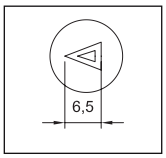

Product Code
952.200

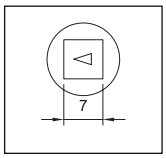

Product Code
952.201

HANDLE LOCK

Product Code: 951.205
Quantity : 1

SPARE PARTS

M5x10 SELF TAPPING SCREW

Product Code: 951.211
Quantity : 100

DOUBLEBIT KEY

Product Code: 952.100
Quantity : 1

SEISMIC TESTED IP65 EAC c UL us IEC DEKRA

TEOS SERIES 94

NEO
MODULAR SERIES 116

NEO
MONOBLOCK SERIES 136

NEO HC OUTDOOR
MODULAR SERIES 142

NEO HC OUTDOOR
MONOBLOCK SERIES 150

ASSEMBLY SUPPORT PRODUCTS 154

FLOORSTANDING MODULAR CABINET

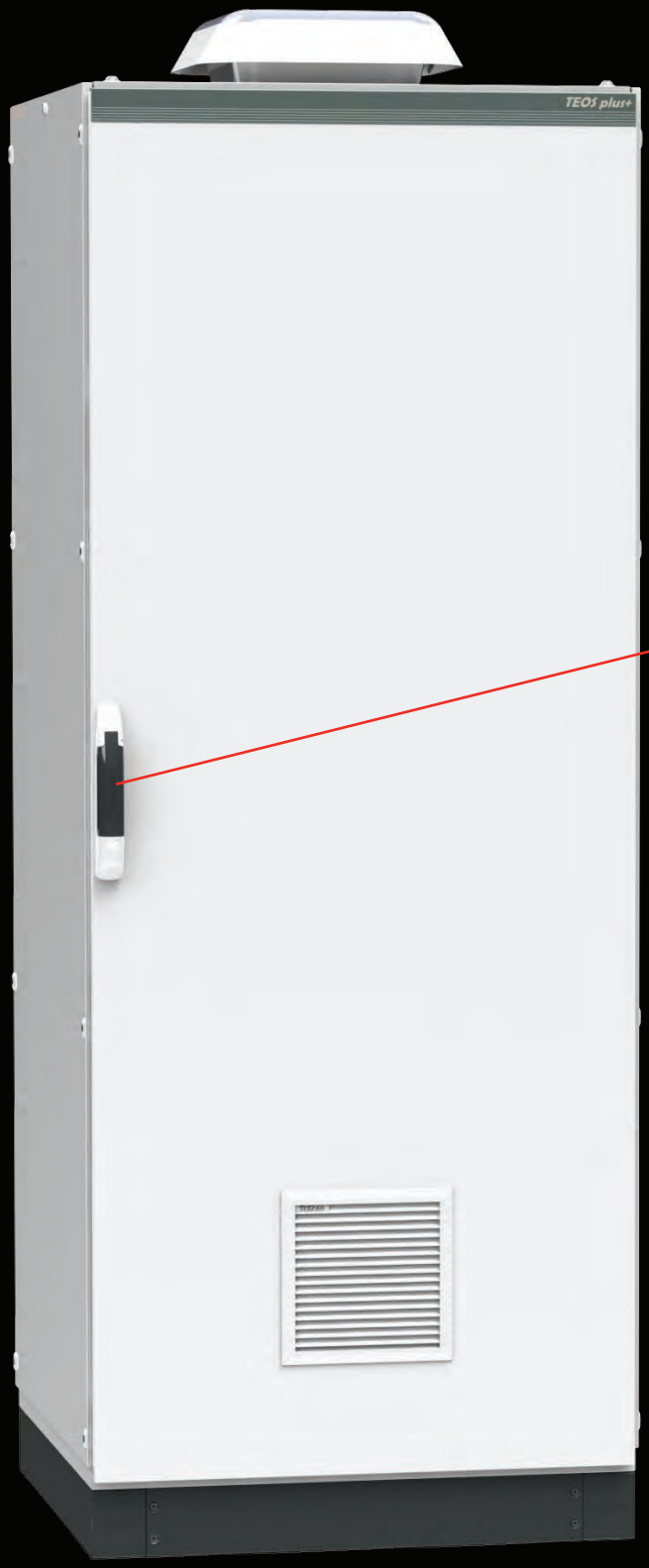

c UL us

CE

EAC

IEC

RoHS

DEKRA

FLOORSTANDING MODULAR CABINET

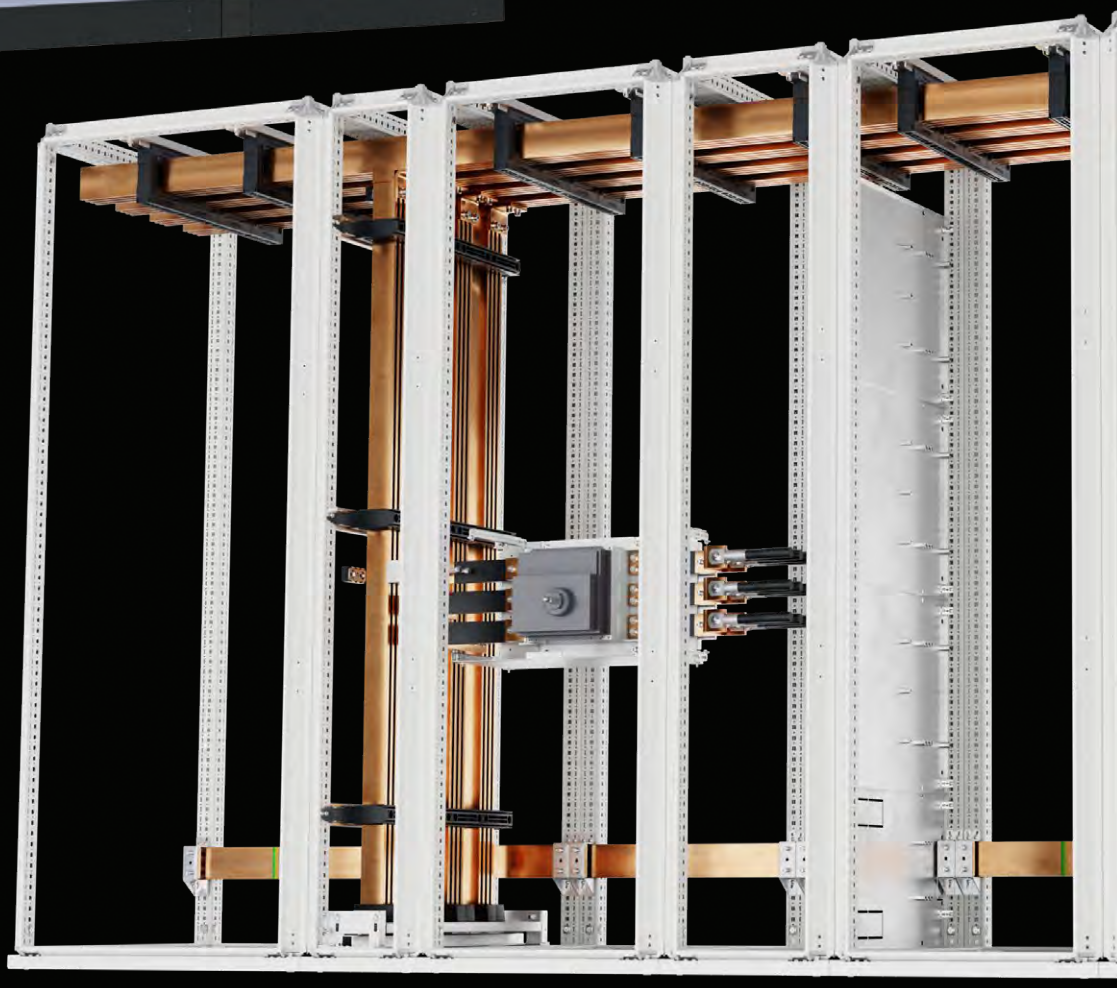

SEISMIC (EARTHQUAKE) RESISTANCE TEST REPORT

ZONE 3

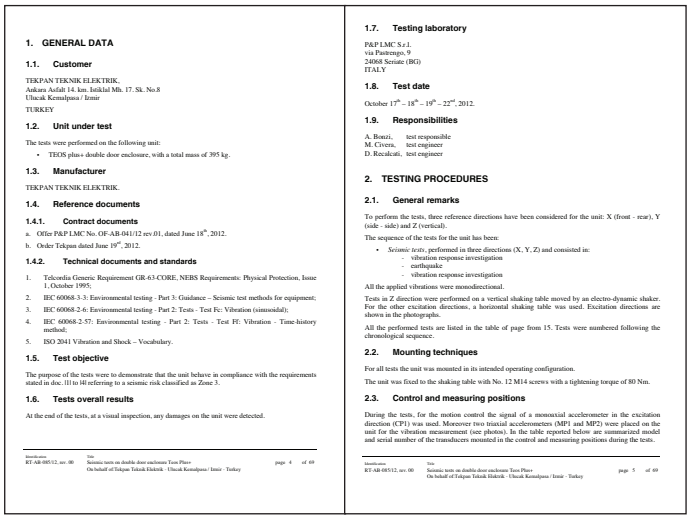

1. GENERAL DATA

1.1. Customer

TEKPAN TEKNIK ELEKTRIK,
Ankara Asfalt 14. km. Istiklal Mh. 17. Sk. No.8
Ulucak Kemalpasa / Izmir
TURKEY

1.2. Unit under test

The tests were performed on the following unit:

- TEOS plus+ double door enclosure, with a total mass of 395 kg.

1.3. Manufacturer

TEKPAN TEKNIK ELEKTRIK.

1.4. Reference documents

1.4.1. Contract documents

a. Offer P&P LMC No. OF-AB-041/12 rev.01, dated June 18th, 2012.
b. Order Tekpan dated June 19th, 2012.

1.4.2. Technical documents and standards

1. Telcordia Generic Requirement GR-63-CORE, NEBS Requirements: Physical Protection, Issue 1, October 1995;
2. IEC 60068-3-3: Environmental testing - Part 3: Guidance – Seismic test methods for equipment;
3. IEC 60068-2-6: Environmental testing - Part 2: Tests - Test Fc: Vibration (sinusoidal);
4. IEC 60068-2-57: Environmental testing - Part 2: Tests - Test Ff: Vibration - Time-history method;
5. ISO 2041 Vibration and Shock – Vocabulary.

1.5. Test objective

The purpose of the tests were to demonstrate that the unit behave in compliance with the requirements stated in doc.III to I4I referring to a seismic risk classified as Zone 3.

1.6. Tests overall results

At the end of the tests, at a visual inspection, any damages on the unit were detected.

Identification RT-AB-085/12, rev. 00 | Title: Seismic tests on double door enclosure Teos Plus+ On behalf of Tekpan Teknik Elektrik - Ulucak Kemalpasa / Izmir - Turkey | page 4 of 69

1.7. Testing laboratory

P&P LMC S.r.l.
via Pastrengo, 9
24068 Seriate (BG)
ITALY

1.8. Test date

October 17th – 18th – 19th – 22nd, 2012.

1.9. Responsibilities

A. Bonzi, test responsible
M. Civera, test engineer
D. Recalcati, test engineer

2. TESTING PROCEDURES

2.1. General remarks

To perform the tests, three reference directions have been considered for the unit: X (front - rear), Y (side - side) and Z (vertical).

The sequence of the tests for the unit has been:

- Seismic tests, performed in three directions (X, Y, Z) and consisted in:
  - vibration response investigation
  - earthquake
  - vibration response investigation

All the applied vibrations were monodirectional.

Tests in Z direction were performed on a vertical shaking table moved by an electro-dynamic shaker. For the other excitation directions, a horizontal shaking table was used. Excitation directions are shown in the photographs.

All the performed tests are listed in the table of page from 15. Tests were numbered following the chronological sequence.

2.2. Mounting techniques

For all tests the unit was mounted in its intended operating configuration.

The unit was fixed to the shaking table with No. 12 M14 screws with a tightening torque of 80 Nm.

2.3. Control and measuring positions

During the tests, for the motion control the signal of a monoaxial accelerometer in the excitation direction (CP1) was used. Moreover two triaxial accelerometers (MP1 and MP2) were placed on the unit for the vibration measurement (see photos). In the table reported below are summarized model and serial number of the transducers mounted in the control and measuring positions during the tests.

Identification RT-AB-085/12, rev. 00 | Title: Seismic tests on double door enclosure Teos Plus+ On behalf of Tekpan Teknik Elektrik - Ulucak Kemalpasa / Izmir - Turkey | page 5 of 69

- Zone3' All Teos series products are within the scope of Zone 3 seismic resistance tests.
- Zone3' test was conducted for double-door enclosures of size 1200 widthx2000+100 height and 600 mm depth, and covers all sizes and types of the Teos series.
- You can view the complete report on our websites.

ZONE 4

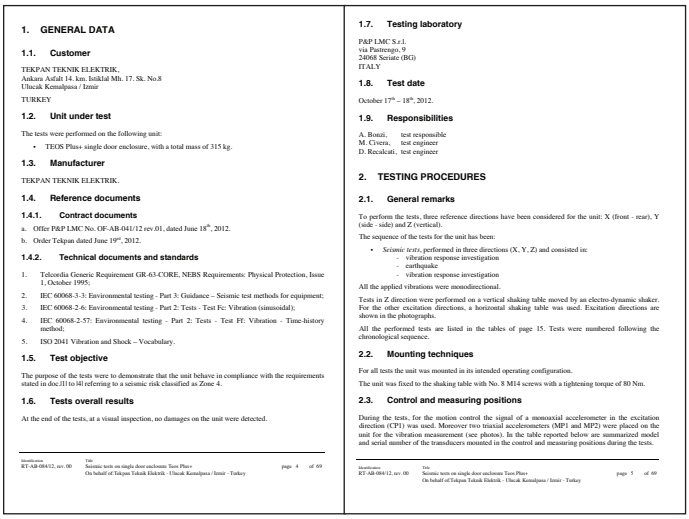

1. GENERAL DATA

1.1. Customer

TEKPAN TEKNIK ELEKTRIK,
Ankara Asfalt 14. km. Istiklal Mh. 17. Sk. No.8
Ulucak Kemalpasa / Izmir
TURKEY

1.2. Unit under test

The tests were performed on the following unit:

- TEOS Plus+ single door enclosure, with a total mass of 315 kg.

1.3. Manufacturer

TEKPAN TEKNIK ELEKTRIK.

1.4. Reference documents

1.4.1. Contract documents

a. Offer P&P LMC No. OF-AB-041/12 rev.01, dated June 18th, 2012.
b. Order Tekpan dated June 19th, 2012.

1.4.2. Technical documents and standards

1. Telcordia Generic Requirement GR-63-CORE, NEBS Requirements: Physical Protection, Issue 1, October 1995;
2. IEC 60068-3-3: Environmental testing - Part 3: Guidance – Seismic test methods for equipment;
3. IEC 60068-2-6: Environmental testing - Part 2: Tests - Test Fc: Vibration (sinusoidal);
4. IEC 60068-2-57: Environmental testing - Part 2: Tests - Test Ff: Vibration - Time-history method;
5. ISO 2041 Vibration and Shock – Vocabulary.

1.5. Test objective

The purpose of the tests were to demonstrate that the unit behave in compliance with the requirements stated in doc.III to I4I referring to a seismic risk classified as Zone 4.

1.6. Tests overall results

At the end of the tests, at a visual inspection, no damages on the unit were detected.

Identification RT-AB-084/12, rev. 00 | Title: Seismic tests on single door enclosure Teos Plus+ On behalf of Tekpan Teknik Elektrik - Ulucak Kemalpasa / Izmir - Turkey | page 4 of 69

1.7. Testing laboratory

P&P LMC S.r.l.
via Pastrengo, 9
24068 Seriate (BG)
ITALY

1.8. Test date

October 17th – 18th, 2012.

1.9. Responsibilities

A. Bonzi, test responsible
M. Civera, test engineer
D. Recalcati, test engineer

2. TESTING PROCEDURES

2.1. General remarks

To perform the tests, three reference directions have been considered for the unit: X (front - rear), Y (side - side) and Z (vertical).

The sequence of the tests for the unit has been:

- Seismic tests, performed in three directions (X, Y, Z) and consisted in:
  - vibration response investigation
  - earthquake
  - vibration response investigation

All the applied vibrations were monodirectional.

Tests in Z direction were performed on a vertical shaking table moved by an electro-dynamic shaker. For the other excitation directions, a horizontal shaking table was used. Excitation directions are shown in the photographs.

All the performed tests are listed in the tables of page 15. Tests were numbered following the chronological sequence.

2.2. Mounting techniques

For all tests the unit was mounted in its intended operating configuration.

The unit was fixed to the shaking table with No. 8 M14 screws with a tightening torque of 80 Nm.

2.3. Control and measuring positions

During the tests, for the motion control the signal of a monoaxial accelerometer in the excitation direction (CP1) was used. Moreover two triaxial accelerometers (MP1 and MP2) were placed on the unit for the vibration measurement (see photos). In the table reported below are summarized model and serial number of the transducers mounted in the control and measuring positions during the tests.

Identification RT-AB-084/12, rev. 00 | Title: Seismic tests on single door enclosure Teos Plus+ On behalf of Tekpan Teknik Elektrik - Ulucak Kemalpasa / Izmir - Turkey | page 5 of 69

- 'For 'Zone 4' seismic resistance tests, an enclosure sized 800 width x 2000+100 height x 800 with an extra reinforced interior and welded plinth was used.
- The abovementioned size and structure are required for your needs within the scope of 'Zone 4'. Please contact our sales department for your needs.
- You can view the complete report on our websites

UL CERTIFICATE
VALID CERTIFICATE IN THE USA AND CANADA

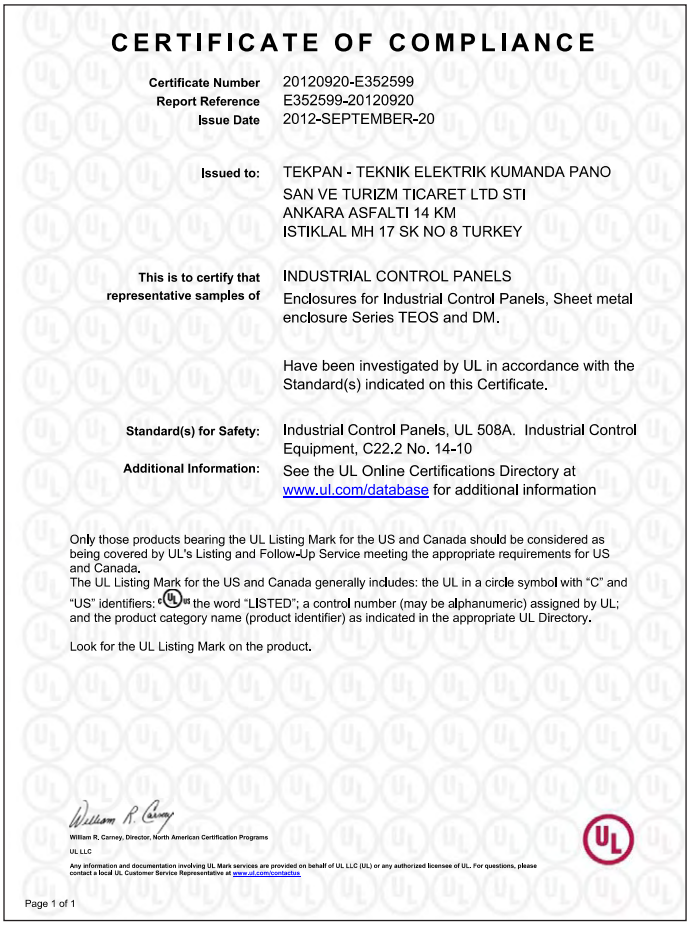

CERTIFICATE OF COMPLIANCE

Certificate Number 20120920-E352599
Report Reference E352599-20120920
Issue Date 2012-SEPTEMBER-20

Issued to: TEKPAN - TEKNIK ELEKTRIK KUMANDA PANO SAN VE TURIZM TICARET LTD STI
ANKARA ASFALTI 14 KM
ISTIKLAL MH 17 SK NO 8 TURKEY

This is to certify that representative samples of: INDUSTRIAL CONTROL PANELS
Enclosures for Industrial Control Panels, Sheet metal enclosure Series TEOS and DM.

Have been investigated by UL in accordance with the Standard(s) indicated on this Certificate.

Standard(s) for Safety: Industrial Control Panels, UL 508A. Industrial Control Equipment, C22.2 No. 14-10

Additional Information: See the UL Online Certifications Directory at www.ul.com/database for additional information

Only those products bearing the UL Listing Mark for the US and Canada should be considered as being covered by UL's Listing and Follow-Up Service meeting the appropriate requirements for US and Canada.
The UL Listing Mark for the US and Canada generally includes: the UL in a circle symbol with "C" and "US" identifiers; the word "LISTED"; a control number (may be alphanumeric) assigned by UL; and the product category name (product identifier) as indicated in the appropriate UL Directory.

Look for the UL Listing Mark on the product.

William R. Carney
William R. Carney, Director, North American Certification Programs
UL LLC

Any information and documentation involving UL Mark services are provided on behalf of UL LLC (UL) or any authorized licensee of UL. For questions, please contact a local UL Customer Service Representative at www.ul.com/contactus

Page 1 of 1

EAC CERTIFICATE

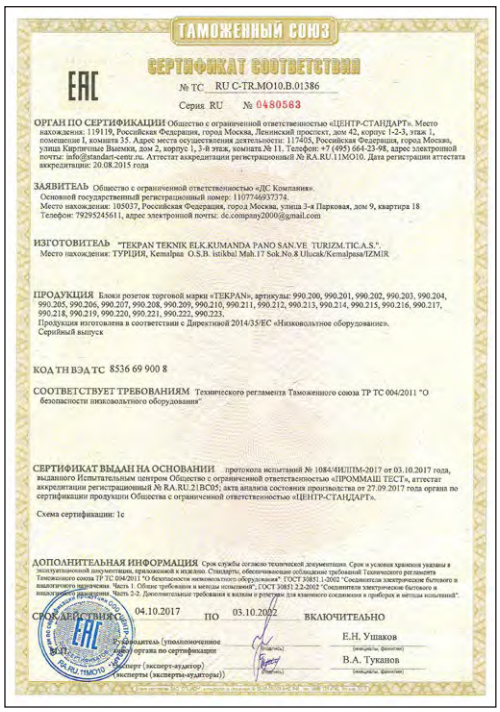

ТАМОЖЕННЫЙ СОЮЗ

СЕРТИФИКАТ СООТВЕТСТВИЯ

№ ТС RU C-TR.MO10.B.01386

Серия RU № 0480583

ОРГАН ПО СЕРТИФИКАЦИИ Общество с ограниченной ответственностью «ЦЕНТР-СТАНДАРТ». Место нахождения: 119119, Российская Федерация, город Москва, Ленинский проспект, дом 42, корпус 1-2-3, этаж 1, помещение I, комната 35. Адрес места осуществления деятельности: 117405, Российская Федерация, город Москва, улица Кирпичная Выемка, дом 2, корпус 1, 3-й этаж, комната № 11. Телефон: +7 (495) 664-23-98, адрес электронной почты: info@standart-centr.ru. Аттестат аккредитации регистрационный № RA.RU.11МО10. Дата регистрации аттестата аккредитации: 20.08.2015 года

ЗАЯВИТЕЛЬ Общество с ограниченной ответственностью «ДС Компания».
Основной государственный регистрационный номер: 1107746937374.
Место нахождения: 105037, Российская Федерация, город Москва, улица 3-я Парковая, дом 9, квартира 18
Телефон: 79295245611, адрес электронной почты: dc.company2000@gmail.com

ИЗГОТОВИТЕЛЬ "TEKPAN TEKNIK ELK.KUMANDA PANO SAN.VE TURIZM.TIC.A.Ş.".
Место нахождения: ТУРЦИЯ, Kemalpaa O.S.B. istikbal Mah.17 Sok.No.8 Ulucak/Kemalpasa/IZMIR

ПРОДУКЦИЯ Блоки розеток торговой марки «TEKPAN», артикулы: 990.200, 990.201, 990.202, 990.203, 990.204, 990.205, 990.206, 990.207, 990.208, 990.209, 990.210, 990.211, 990.212, 990.213, 990.214, 990.215, 990.216, 990.217, 990.218, 990.219, 990.220, 990.221, 990.222, 990.223.
Продукция изготовлена в соответствии с Директивой 2014/35/ЕС «Низковольтное оборудование».
Серийный выпуск

КОД ТН ВЭД ТС 8536 69 900 8

СООТВЕТСТВУЕТ ТРЕБОВАНИЯМ Технического регламента Таможенного союза ТР ТС 004/2011 "О безопасности низковольтного оборудования"

СЕРТИФИКАТ ВЫДАН НА ОСНОВАНИИ протокола испытаний № 1084/ИЦПМ-2017 от 03.10.2017 года, выданного Испытательным центром Общество с ограниченной ответственностью «ПРОММАШ ТЕСТ», аттестат аккредитации регистрационный № RA.RU.21ВС05; акта анализа состояния производства от 27.09.2017 года органа по сертификации продукции Общества с ограниченной ответственностью «ЦЕНТР-СТАНДАРТ».

Схема сертификации: 1с

ДОПОЛНИТЕЛЬНАЯ ИНФОРМАЦИЯ Срок службы согласно технической документации. Срок и условия хранения указаны в эксплуатационной документации, прилагаемой к изделию. Стандарты, обеспечивающие соблюдение требований Технического регламента Таможенного союза ТР ТС 004/2011 "О безопасности низковольтного оборудования". ГОСТ 30851.1-2002 "Соединители электрические бытового и аналогичного назначения. Часть 1. Общие требования и методы испытаний"; ГОСТ 30851.22-2002 "Соединители электрические бытового и аналогичного назначения. Часть 2-2. Дополнительные требования к вилкам и розеткам для взаимного соединения и приборов и методы испытаний".

СРОК ДЕЙСТВИЯ С 04.10.2017 ПО 03.10.2022 ВКЛЮЧИТЕЛЬНО

М.П. Руководитель (уполномоченное лицо) органа по сертификации — Е.Н. Ушаков
Эксперт (эксперт-аудитор) (эксперты (эксперты-аудиторы)) — В.А. Туканов

- You can view the complete report on our websites

TEOS POWERED FRAME STRUCTURE

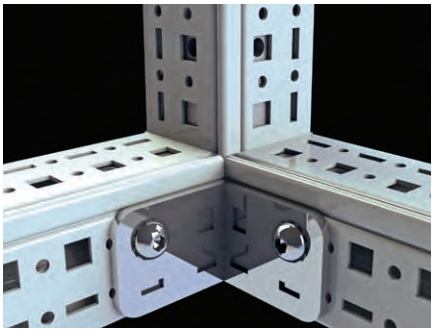

Turkish Patent No: TR 201009615Y

Produced with a closed rail structure, Teos enclosure rails are clamped with a special non-welded clamping system. Their resistance to both vertical and horizontal pressures is extremely high compared to open rail structures. This force enables full resistance for the movement of the installed equipments and resistance in overcurrents.

TEOS EARTING CONTINUTIY

Placed on the aliminium corner combination, the earthing hooks are tightly mounted on the uncoated inner surface of the rails by means of eroding. Thereby, the earthing continuity is ensured for all rails and their parts

Placed on the bottom-top inner parts of the front door, the earthing screw increases conductive surface. Thereby, the front door is more efficiently grounded as the most important part to be grounded.

Applied to all other cover plates, the earthing screws allow for the complete earthing of all enclosure cover plates. Furtermore, TEOS allows for earting all parts by use of special grounding washers.

TEOS CORROSION PROTECTION

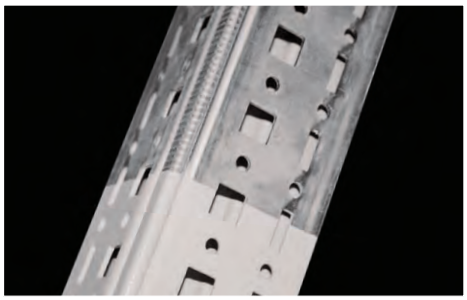

Teos closed frame made by galvanized steel (DIN EN 10142_00 DX51 D+Z) and coated iron-phosphated and powder coated from outside of the surface. Non-powder coated inside surface can not corrade because of the galvanized material style.

Manufactured from aliminum-cast (E-160) material, the rail connection corners do not corrode thanks to their aliminium structure.

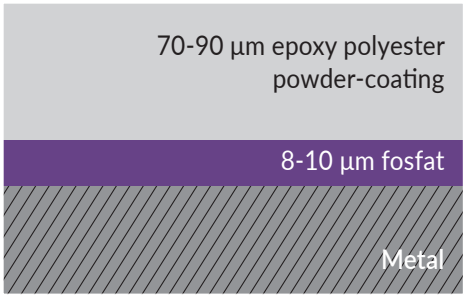

All coated parts respectively undergo the automatic processes of washing, phosphating, deionized passivation- drying- coating- firing and are treated with active coating. 500 hour salt test resistance is acquired according to the test results of this process

TEOS EASY ASSEMBLING AND LOGISTICAL ADVANTAGES

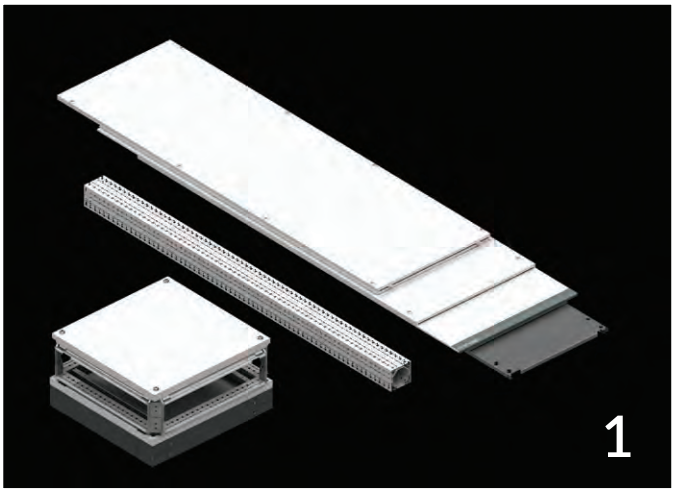

Offered as flat package, the TEOS series is designed for an easy mounting in a minimal amount of time. It does not require angulation for the body and can be mounted between 15-20 minutes by two people.

Offered as flat package, TEOS series save space during transportation and storage. However, since packages can be replaced with each other, they provide more solutions with less inventory.

You can access the Teos assembly video by scanning the QR code.

TEOS PLINTH SYSTEM

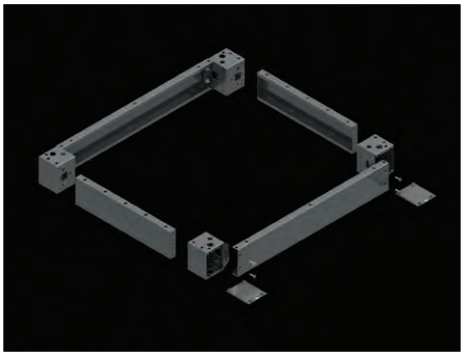

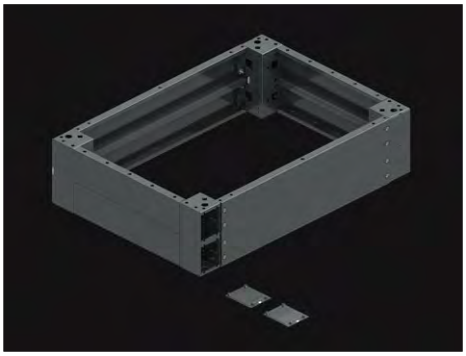

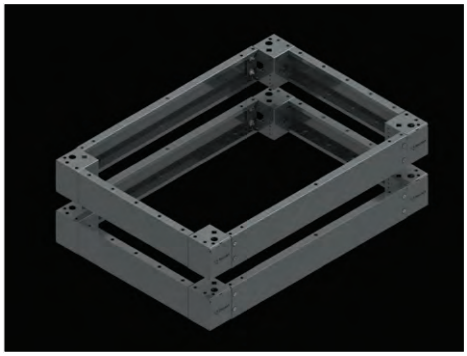

Front surfaces of the corner parts are open in the plinth system which is designed with a height of 100 mm and 200 mm. This enables not only an easy mounting on the enclosure but also an easy ground fixing. Upon the completion of this process, the plastic panel closes without use of screws.

Plinth front panels are mounted with screws while the side panels are screwed from the inside.

A separate corner can be used for plinth applications with a height of 200 mm as well as plinths with a height of 100 mm can be superimposed to reach the 200 mm height.

TEOS FRONT DOOR

Lock and hinge placed in four points

Wide Space and Strong Door Rail

Since locking is performed on the rails, inner space of the cover plates allows for a maximum efficiency.

As the closed support rails are manufactured as a completely closed box, they are more resistant to bending. This ensures a stronger cover plate

Comfort Handle Lock with Insert Protection

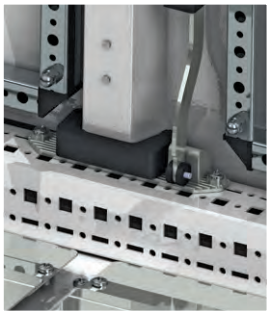

Rigid and Durable Lock Structure

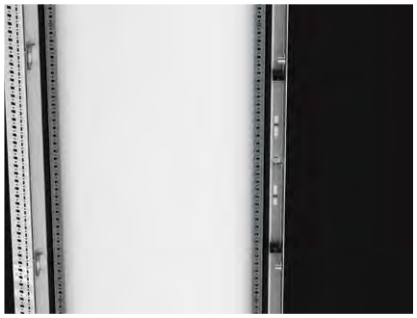

Lock failures experienced in most enclosures are prevented in TEOS. Thanks to their corrugated and long-lasting structure, the locking plates do not bend and corrode.

IP 55 - IP 65 PROTECTION CATEGORY

Sealing foam gaskets are used on the body door, back door, side panels and top panels of the enclosure. This gasket enables complete isolation between -40 and +100 C

All gaskets apply pressure on the convex frame curves. Dust and water particles are left in the space between the convex curves, and thus pressure on the gasket is prevented.

All seal applications on the covers press on the convex curves in the carcasses Dust and water droplets are left in the area between these convex curves and the pressure on the seal is prevented.

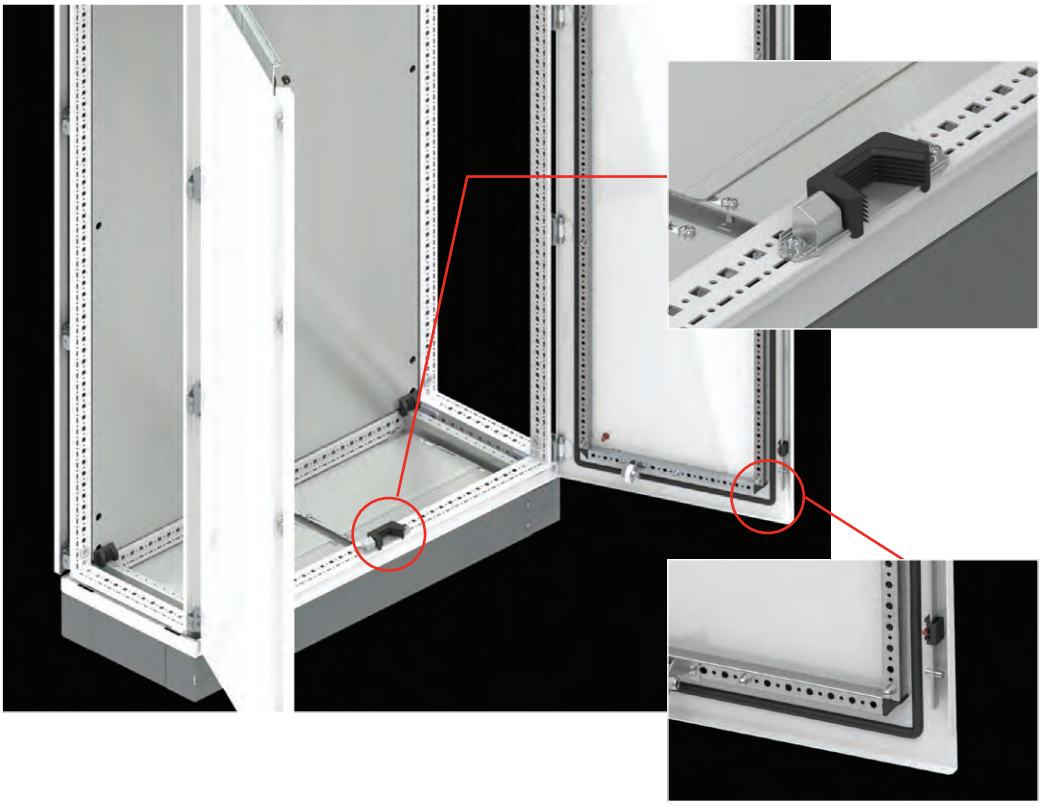

Applied to double-door enclosures, the insulating gasket assumes a full protective role between two panels and the frame when both doors close over the gasket.

Applied to all front doors and panels, the liquid seal is used in all double-door enclosures and acts as an insulator between two doors. Locking system of both doors work separately and this enables a full gasket pressing

MOUNTING PLATE SYSTEM

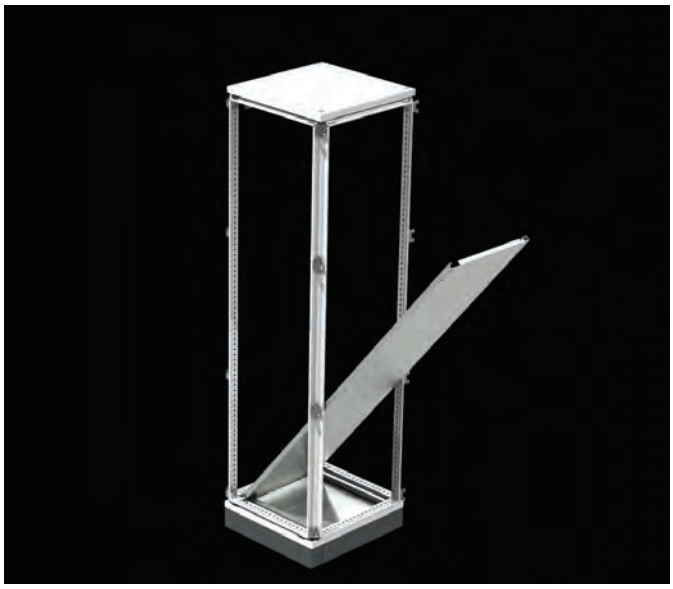

Manufactured from a 3,00 mm galvanized steel, TEOS mounting plates are railed and easily mounted. With its thick steel sheet structure, the mounting plate can carry heavy equipment with its rigid structure and does not need additional side support parts. In this way, bayed enclosure space is increased in combined enclosures.

Connected to the mounting plates, the intermediate mounting plate increases space and can move back and front together with the mounting plates.

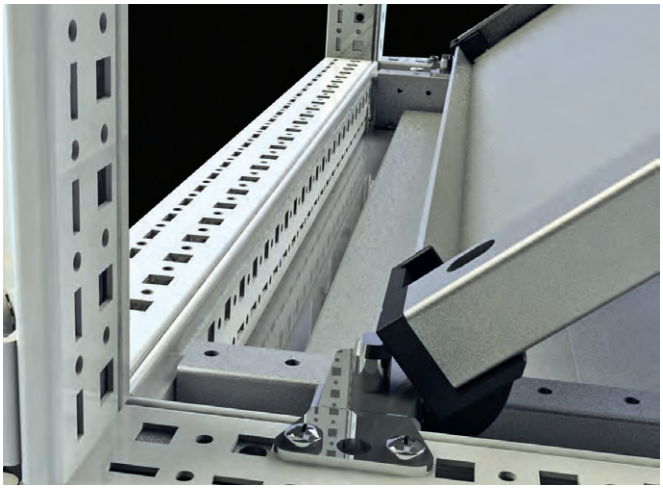

SIZES and MODELS (DISASSEMBLED)

TOP/BOTTOM GROUP

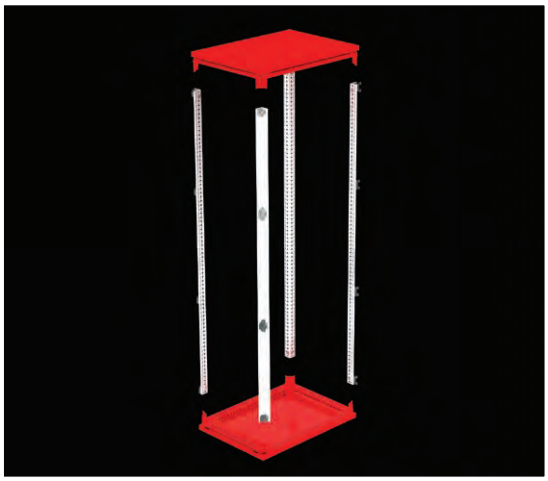

Relevant Size : ENCLOSURE WIDTH x DEPTH
Material : Body : 1,50 mm galvanized steel+RAL7035 powder-coating
Top Cover : 1,50 mm mild steel +RAL7035 powder-coating
Bottom : 1,50 mm mild steel + RAL7035 powder-coating
Gland Plate : 1,50 mm galvanized steel

Supply Includes : 1 set of upper body, 1 set of lower body, 1 pcs gland plate, 1 pcs top cover and body mounting parts.

NOTE : 4 pcs eyebolts is added upon your request.

PRODUCT CODE	WIDTH (mm)	DEPTH (mm)
701.450	400	500
701.460	400	600
701.480	400	800
701.640	600	400
701.650	600	500
701.660	600	600
701.680	600	800
701.610	600	1000

PRODUCT CODE	WIDTH (mm)	DEPTH (mm)
701.740	700	400
701.750	700	500
701.760	700	600
701.780	700	800
701.840	800	400
701.850	800	500
701.860	800	600
701.880	800	800
701.810	800	1000

PRODUCT CODE	WIDTH (mm)	DEPTH (mm)
701.040	1000	400
701.050	1000	500
701.060	1000	600
701.080	1000	800
701.240	1200	400
701.250	1200	500
701.260	1200	600
701.280	1200	800

VERTICAL FRAME GROUP

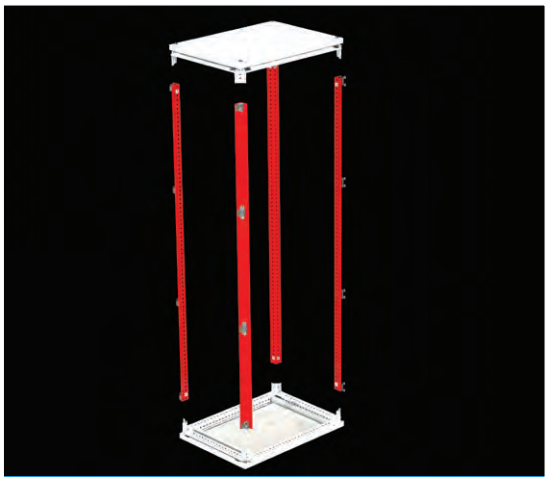

Relevant Size : ENCLOSURE HEIGHT

Material : Frame : 1,50 mm galvanized steel + RAL7035 powder-coating

Supply Includes : 4 pcs vertical frame

PRODUCT CODE	HEIGHT (mm)
702.120	1200
702.160	1600
702.180	1800
702.200	2000
702.220	2200

SIZES and MODELS (DISASSEMBLED)

PLINTH CORNER PART

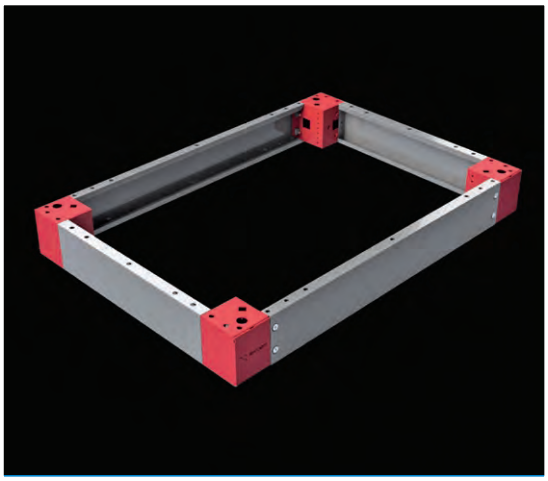

Relevant Size : PLINTH HEIGHT

Material : Corner part : 2,00 mm galvanized steel + RAL 7012 powder-coating
Plastic Panel : RAL 7012 ABS Plastic

Supply Includes : 4 pcs 100 mm or 200 mm high plinth corner part, 4 pcs plastic cover and mounting parts

NOTE : Please see page 154-155 for plinth accessories.

PRODUCT CODE	TEOS Plinth Height (mm)
708.100	100
708.200	200

PLINTH FRONT COVERS

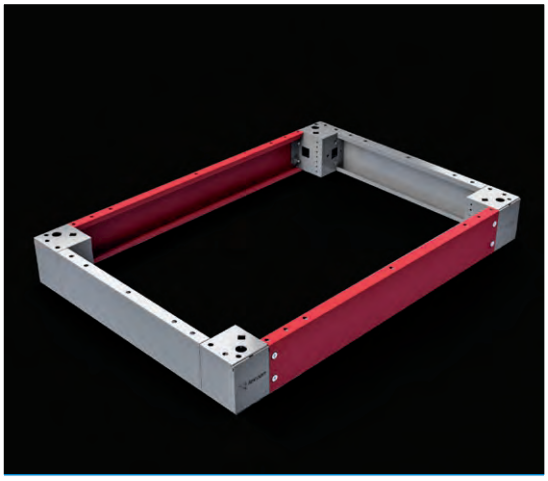

Relevant Size : ENCLOSURE WIDTH

Material : 1,50 mm galvanized steel + RAL 7012 powder-coating

Supply Includes : 2 pcs 100 mm high front plinth panel and mounting parts

NECESSARY : 2 sets of front plinth panel group for 200 mm height plinths.

PRODUCT CODE	Enclosue Width (mm)
709.140	400
709.160	600
709.170	700
709.180	800
709.100	1000
709.120	1200

PLINTH SIDE COVERS

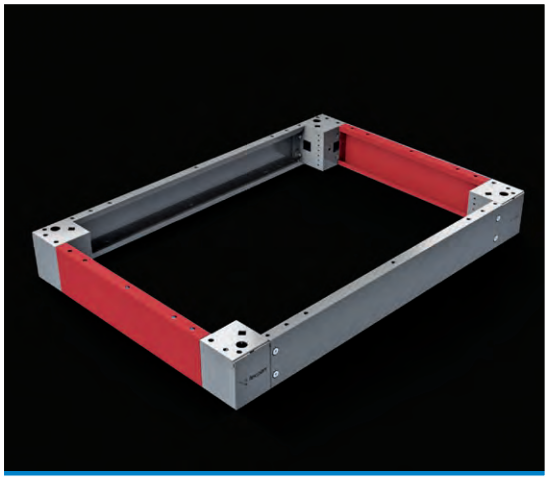

Relevant Size : ENCLOSURE DEPTH

Material : 1,50 mm galvanized steel + RAL 7012 powder-coating

Supply Includes : 2 pcs 100 mm high side plinth panel and mounting parts

NECESSARY : 2 sets of front plinth panel group for 200 mm high plinths.

PRODUCT CODE	Enclosue Depth (mm)
710.140	400
710.150	500
710.160	600
710.180	800
710.100	1000

SIZES and MODELS (DISASSEMBLED)

REAR PANEL GROUP

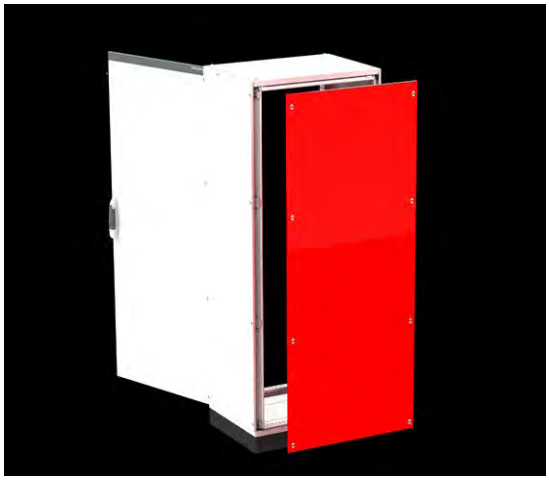

Relevant size : ENCLOSURE WIDTH x HEIGHT

Material : 1,50 mm mild steel + RAL 7035 powder-coating

Supply Includes : 1 pcs rear panel and mounting parts

PRODUCT CODE	WIDTH (mm)	HEIGHT (mm)
703.418	400	1800
703.420	400	2000
703.612	600	1200
703.616	600	1600
703.618	600	1800
703.620	600	2000
703.622	600	2200

PRODUCT CODE	WIDTH (mm)	HEIGHT (mm)
703.720	700	2000
703.812	800	1200
703.816	800	1600
703.818	800	1800
703.820	800	2000
703.822	800	2200

PRODUCT CODE	WIDTH (mm)	HEIGHT (mm)
703.018	1000	1800
703.020	1000	2000
703.212	1200	1200
703.216	1200	1600
703.218	1200	1800
703.220	1200	2000
703.222	1200	2200

SIDE PANELS

Relevant size : ENCLOSURE HEIGHT x DEPTH

Material : 1,50 mm mild steel + RAL 7035 powder-coating

Supply Includes : 2 pcs side panel and mounting parts

PRODUCT CODE	HEIGHT (mm)	DEPTH (mm)
706.124	1200	400
706.125	1200	500
706.126	1200	600
706.164	1600	400
706.165	1600	500
706.166	1600	600

PRODUCT CODE	HEIGHT (mm)	DEPTH (mm)
706.184	1800	400
706.185	1800	500
706.186	1800	600
706.188	1800	800

PRODUCT CODE	HEIGHT (mm)	DEPTH (mm)
706.204	2000	400
706.205	2000	500
706.206	2000	600
706.208	2000	800
706.226	2200	600

SIZES and MODELS (DISASSEMBLED)

SOLID FRONT DOOR

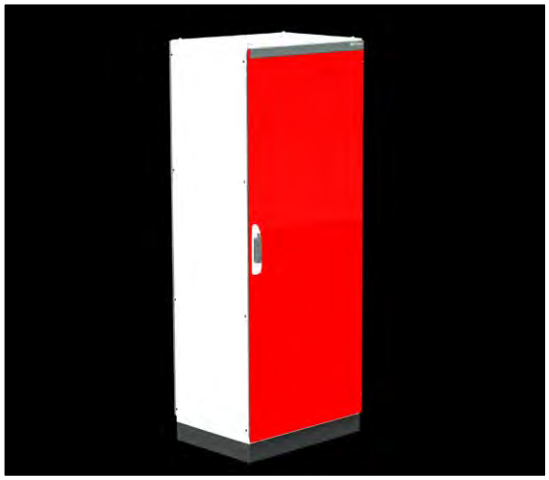

GLAZED FRONT DOOR

Relevant size : ENCLOSURE WIDTH x HEIGHT

Material : Solid Door : 2,00 mm mild steel + RAL 7035 powder-coating
Glazed Door : 2,00 mm mild steel + RAL 7035 powder-coating
4,00 mm tempered glass

Supply Includes : Solid Door : 1 pcs solid door, 1 set of lock, 4 set hinges and door stiffeners
Glazed Door : 1 adet Glazed Door , 1 pcs glazed door, 1 set of lock, 4 sets of hinge and door support profile

ATTENTION : 800 mm and 1000 mm wide enclosures come in both single and double-door versions. 1200 mm wide enclosures come only in double-door versions. Only 600 mm and 800mm wide enclosures come with glazed doors.

ATTENTION : Doors of the double-door version are delivered in two separate packages.

PRODUCT CODE	WIDTH (mm)	HEIGHT (mm)	Door
724.418	400	1800	Single
724.420	400	2000	Single
724.612	600	1200	Single
724.616	600	1600	Single
724.618	600	1800	Single
724.620	600	2000	Single
724.622	600	2200	Single
724.720	700	2000	Single
GLAZED DOOR			
725.618	600	1800	Single
725.620	600	2000	Single

PRODUCT CODE	WIDTH (mm)	HEIGHT (mm)	Door
724.812	800	1200	Single
724.816	800	1600	Single
724.818	800	1800	Single
724.811	800	1800	Doule
724.820	800	2000	Single
724.821	800	2000	Doule
724.822	800	2200	Single
GLAZED DOOR			
725.720	700	2000	Single

PRODUCT CODE	WIDTH (mm)	HEIGHT (mm)	Door
724.018	1000	1800	Doule
724.020	1000	2000	Doule
724.021	1000	2000	Single
724.212	1200	1200	Doule
724.216	1200	1600	Doule
724.218	1200	1800	Doule
724.220	1200	2000	Doule
724.222	1200	2200	Doule
GLAZED DOOR			
725.818	800	1800	Single
725.820	800	2000	Single

SIZES and MODELS (DISASSEMBLED)

MOUNTING PLATE

Relevant size : ENCLOSURE WIDTH x HEIGHT

Material : 3,00 mm Galvanized steel

Supply Includes : 1 pcs mounting plate and mounting parts.

TEOS plus ENCLOSURE mm		
PRODUCT CODE	WIDTH (mm)	HEIGHT (mm)
707.418	400	1800
707.420	400	2000
717.418	400	1800
717.420	400	2000

PRODUCT CODE	WIDTH (mm)	HEIGHT (mm)
707.612	600	1200
707.616	600	1600
707.618	600	1800
707.620	600	2000
707.622	600	2200

TEOS plus ENCLOSURE mm		
PRODUCT CODE	WIDTH (mm)	HEIGHT (mm)
707.718	700	1800
707.720	700	2000
707.812	800	1200
707.816	800	1600
707.818	800	1800
707.820	800	2000
707. 822	800	2200

TEOS plus ENCLOSURE mm		
PRODUCT CODE	WIDTH (mm)	HEIGHT (mm)
707.018	1000	1800
707.020	1000	2000
707.212	1200	1200
707.216	1200	1600
707.218	1200	1800
707.220	1200	2000
707.222	1200	2200

INTERMEDIATE MOUNTING PLATE

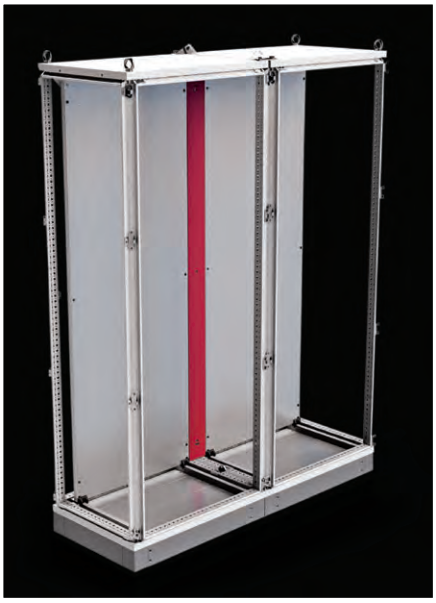

Relevant size : ENCLOSURE HEIGHT

Material : 2,00 mm galvanized steel

Supply Includes : 1 pcs mounting plate, 3 pcs bracket and mounting parts

PRODUCT CODE	ENCLOSURE HEIGHT (mm)
712.120	1200
712.160	1600
712.180	1800
712.200	2000
712.220	2200

SIZES and MODELS (DISASSEMBLED)

BAYING KIT

Material : 3,00 mm - 4,00 mm mild steel parts + zinc coated

Supply Includes : 2 pcs combination, 4 pcs angular brackets,
2 pcs adjustable bracket, 4 pcs fixing bracket,
5,60 m intermediate insulation gasket and mounting parts

Product Code : **711.000**

NOTE : Please see page 159-162 for other combination and support systems.

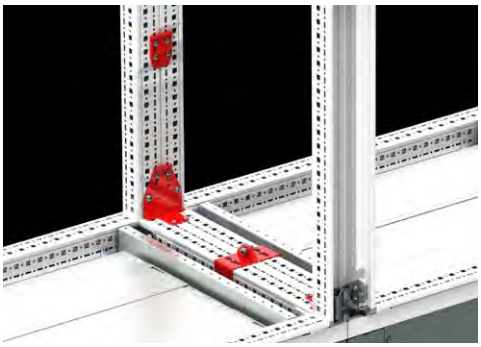

SIZES and MODELS (DISASSEMBLED)

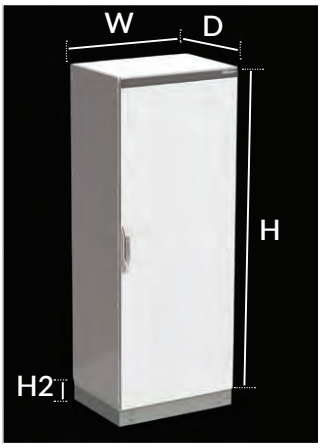

ENCLOSURE DEPTH 500 mm (D)		Height (H) 1200 mm			Height (H) 1600 mm		
		PENCLOSURE WIDTH mm (W)			PENCLOSURE WIDTH mm (W)		
Step	Product Description	Single Door 600	Single Door 800	Double Door 1200	Single Door 600	Single Door 800	Double Door 1200
1	TOP/BOTTOM GROUP	701.650	701.850	701.250	701.650	701.850	701.250
2	VERTICAL FRAMES GROUP	702.120	702.120	702.120	702.160	702.160	702.160
3	PLINTH CORNER PART H100mm (H2)	708.100	708.100	708.100	708.100	708.100	708.100
3	PLINTH CORNER PART H200mm (H2)	708.200	708.200	708.200	708.200	708.200	708.200
4	PLINTH FRONT COVERS H100mm (H2)	709.160	709.180	709.120	709.160	709.180	709.120
5	PLINTH SIDE COVERS H100mm (H2)	710.150	710.150	710.150	710.150	710.150	710.150
6	REAR PANEL	703.612	703.812	703.212	703.616	703.816	703.216
7	FRONT DOOR (SOLID)	724.612	724.812	724.212	724.616	724.816	724.216
8	SIDE PANELS (2 pcs.)	706.125	706.125	706.125	706.165	706.165	706.165
9	MOUNTING PLATE	707.612	707.812	707.212	707.616	707.816	707.216
10	BAYING KIT	711.000	711.000	711.000	711.000	711.000	711.000
11	EYEBOLT(4 pcs.)	612.000	612.000	612.000	612.000	612.000	612.000

ENCLOSURE DEPTH 400 mm (D)		Height (H) 1800 mm				
		ENCLOSURE WIDTH mm (W)				
Step	Product Description	Single Door 600	Single Door 800	Double Door 800	Double Door 1000	Double Door 1200
1	TOP/BOTTOM GROUP	701.640	701.840	701.840	701.040	701.240
2	VERTICAL FRAMES GROUP	702.180	702.180	702.180	702.180	702.180
3	PLINTH CORNER PART H100mm (H2)	708.100	708.100	708.100	708.100	708.100
3	PLINTH CORNER PART H200mm (H2)	708.200	708.200	708.200	708.200	708.200
4	PLINTH FRONT COVERS H100mm (H2)	709.160	709.180	709.180	709.100	709.120
5	PLINTH SIDE COVERS H100mm (H2)	710.140	710.140	710.140	710.140	710.140
6	REAR PANEL	703.618	703.818	703.818	703.018	703.218
7	FRONT DOOR (SOLID)	724.618	724.818	724.811	724.018	724.218
7	FRONT DOOR (GLAZED)	725.618	725.818	-	-	-
8	SIDE PANELS (2 pcs.)	706.184	706.184	706.184	706.184	706.184
9	MOUNTING PLATE	707.618	707.818	707.818	707.018	707.218
10	BAYING KIT	711.000	711.000	711.000	711.000	711.000
11	EYEBOLT(4 pcs.)	612.000	612.000	612.000	612.000	612.000

SIZES and MODELS (DISASSEMBLED)

ENCLOSURE DEPTH 500 mm (D)		Height (H) 1800 mm					
		ENCLOSURE WIDTH mm (W)					
Step	Product Description	Single Door 400	Single Door 600	Single Door 800	Double Door 800	Double Door 1000	Double Door 1200
1	TOP/BOTTOM GROUP	701.450	701.650	701.850	701.850	701.050	701.250
2	VERTICAL FRAMES GROUP	702.180	702.180	702.180	702.180	702.180	702.180
3	PLINTH CORNER PART H100mm (H2)	708.100	708.100	708.100	708.100	708.100	708.100
3	PLINTH CORNER PART H200mm (H2)	708.200	708.200	708.200	708.200	708.200	708.200
4	PLINTH FRONT COVERS H100mm (H2)	709.140	709.160	709.180	709.180	709.100	709.120
5	PLINTH SIDE COVERS H100mm (H2)	710.150	710.150	710.150	710.150	710.150	710.150
6	REAR PANEL	703.418	703.618	703.818	703.818	703.018	703.218
7	FRONT DOOR (SOLID)	724.418	724.618	724.818	724.811	724.018	724.218
7	FRONT DOOR (GLAZED)	-	725.618	725.818	-	-	-
8	SIDE PANELS (2 pcs.)	706.185	706.185	706.185	706.185	706.185	706.185
9	MOUNTING PLATE	-	707.618	707.818	707.818	707.018	707.218
10	BAYING KIT	711.000	711.000	711.000	711.000	711.000	711.000
11	EYEBOLT(4 pcs.)	612.000	612.000	612.000	612.000	612.000	612.000

ENCLOSURE DEPTH 600 mm (D)		Height (H) 1800 mm					
		ENCLOSURE WIDTH mm (W)					
Step	Product Description	Single Door 400	Single Door 600	Single Door 800	Single Door 800	Double Door 1000	Double Door 1200
1	TOP/BOTTOM GROUP	701.460	701.660	701.860	701.860	701.060	701.260
2	VERTICAL FRAMES GROUP	702.180	702.180	702.180	702.180	702.180	702.180
3	PLINTH CORNER PART H100mm (H2)	708.100	708.100	708.100	708.100	708.100	708.100
3	PLINTH CORNER PART H200mm (H2)	708.200	708.200	708.200	708.200	708.200	708.200
4	PLINTH FRONT COVERS H100mm (H2)	709.140	709.160	709.180	709.180	709.100	709.120
5	PLINTH SIDE COVERS H100mm (H2)	710.160	710.160	710.160	710.160	710.160	710.160
6	REAR PANEL	703.418	703.618	703.818	703.818	703.018	703.218
7	FRONT DOOR (SOLID)	724.418	724.618	724.818	724.811	724.018	724.218
7	FRONT DOOR (GLAZED)	-	725.618	725.818	-	-	-
8	SIDE PANELS (2 pcs.)	706.186	706.186	706.186	706.186	706.186	706.186
9	MOUNTING PLATE	-	707.618	707.818	707.818	707.018	707.218
10	BAYING KIT	711.000	711.000	711.000	711.000	711.000	711.000
11	EYEBOLT(4 pcs.)	612.000	612.000	612.000	612.000	612.000	612.000

SIZES and MODELS (DISASSEMBLED)

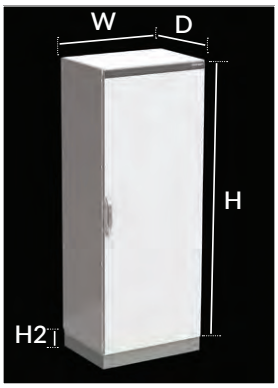

ENCLOSURE DEPTH 400 mm (D)		Height (H) 2000 mm						
		ENCLOSURE WIDTH mm (W)						
Step	Product Description	Single Door 600	Single Door 700	Single Door 800	Double Door 800	Single Door 1000	Double Door 1000	Double Door 1200
1	TOP/BOTTOM GROUP	701.640	701.740	701.840	701.840	701.040	701.040	701.240
2	VERTICAL FRAMES GROUP	702.200	702.200	702.200	702.200	702.200	702.200	702.200
3	PLINTH CORNER PART H100mm (H2)	708.100	708.100	708.100	708.100	708.100	708.100	708.100
3	PLINTH CORNER PART H200mm (H2)	708.200	708.200	708.200	708.200	708.200	708.200	708.200
4	PLINTH FRONT COVERS H100mm (H2)	709.160	709.170	709.180	709.180	709.100	709.100	709.120
5	PLINTH SIDE COVERS H100mm (H2)	710.140	710.140	710.140	710.140	710.140	710.140	710.140
6	REAR PANEL	703.620	703.720	703.820	703.820	703.020	703.020	703.220
7	FRONT DOOR (SOLID)	724.620	724.720	724.820	724.821	724.021	724.020	724.220
7	FRONT DOOR (GLAZED)	725.620	725.720	725.820	-	-	-	-
8	SIDE PANELS (2 pcs)	706.204	706.204	706.204	706.204	706.204	706.204	706.204
9	MOUNTING PLATE	707.620	707.720	707.820	707.820	707.020	707.020	707.220
10	BAYING KIT	711.000	711.000	711.000	711.000	711.000	711.000	711.000
11	EYEBOLT(4 pcs.)	612.000	612.000	612.000	612.000	612.000	612.000	612.000

ENCLOSURE DEPTH 500 mm (D)		Height (H) 2000 mm							
		ENCLOSURE WIDTH mm (W)							
Step	Product Description	Single Door 400	Single Door 600	Single Door 700	Single Door 800	Double Door 800	Single Door 1000	Double Door 1000	Double Door 1200
1	TOP/BOTTOM GROUP	701.450	701.650	701.750	701.850	701.850	701.050	701.050	701.250
2	VERTICAL FRAMES GROUP	702.200	702.200	702.200	702.200	702.200	702.200	702.200	702.200
3	PLINTH CORNER PART H100mm (H2)	708.100	708.100	708.100	708.100	708.100	708.100	708.100	708.100
3	PLINTH CORNER PART H200mm (H2)	708.200	708.200	708.200	708.200	708.200	708.200	708.200	708.200
4	PLINTH FRONT COVERS H100mm (H2)	709.140	709.160	709.170	709.180	709.180	709.100	709.100	709.120
5	PLINTH SIDE COVERS H100mm (H2)	710.150	710.150	710.150	710.150	710.150	710.150	710.150	710.150
6	REAR PANEL	703.420	703.620	703.720	703.820	703.820	703.020	703.020	703.220
7	FRONT DOOR (SOLID)	724.420	724.620	724.720	724.820	724.821	724.021	724.020	724.220
7	FRONT DOOR (GLAZED)	-	725.620	725.720	725.820	-	-	-	-
8	SIDE PANELS (2 pcs)	706.205	706.205	706.205	706.205	706.205	706.205	706.205	706.205
9	MOUNTING PLATE	-	707.620	707.720	707.820	707.820	707.020	707.020	707.220
10	BAYING KIT	711.000	711.000	711.000	711.000	711.000	711.000	711.000	711.000
11	EYEBOLT(4 pcs.)	612.000	612.000	612.000	612.000	612.000	612.000	612.000	612.000

SIZES and MODELS (ASSEMBLED)

ENCLOSURE DEPTH 600 mm (D)		Height (H) 2000 mm							
		ENCLOSURE WIDTH mm (W)							
Step	Product Description	Single Door 400	Single Door 600	Single Door 700	Single Door 800	Single Door 800	Single Door 1000	Single Door 1000	Single Door 1200
1	TOP/BOTTOM GROUP	701.460	701.660	701.760	701.860	701.860	701.060	701.060	701.260
2	VERTICAL FRAMES GROUP	702.200	702.200	702.200	702.200	702.200	702.200	702.200	702.200
3	PLINTH CORNER PART H100mm (H2)	708.100	708.100	708.100	708.100	708.100	708.100	708.100	708.100
3	PLINTH CORNER PART H200mm (H2)	708.200	708.200	708.200	708.200	708.200	708.200	708.200	708.200
4	PLINTH FRONT COVERS H100mm (H2)	709.140	709.160	709.170	709.180	709.180	709.100	709.100	709.120
5	PLINTH SIDE COVERS H100mm (H2)	710.160	710.160	710.160	710.160	710.160	710.160	710.160	710.160
6	REAR PANEL	703.420	703.620	703.720	703.820	703.820	703.020	703.020	703.220
7	FRONT DOOR (SOLID)	724.420	724.620	724.720	724.820	724.821	724.021	724.020	724.220
7	FRONT DOOR (GLAZED)	-	725.620	725.720	725.820	-	-	-	-
8	SIDE PANELS (2 pcs)	706.206	706.206	706.206	706.206	706.206	706.206	706.206	706.206
9	MOUNTING PLATE	-	707.620	707.720	707.820	707.820	707.020	707.020	707.220
10	BAYING KIT	711.000	711.000	711.000	711.000	711.000	711.000	711.000	711.000
11	EYEBOLT(4 pcs.)	612.000	612.000	612.000	612.000	612.000	612.000	612.000	612.000

ENCLOSURE DEPTH 800 mm (D)		Height (H) 2000 mm							
		ENCLOSURE WIDTH mm (W)							
Step	Product Description	Single Door 400	Single Door 600	Single Door 700	Single Door 800	Double Door 800	Single Door 1000	Double Door 1000	Double Door 1200
1	TOP/BOTTOM GROUP	701.480	701.680	701.780	701.880	701.880	701.080	701.080	701.280
2	VERTICAL FRAMES GROUP	702.200	702.200	702.200	702.200	702.200	702.200	702.200	702.200
3	PLINTH CORNER PART H100mm (H2)	708.100	708.100	708.100	708.100	708.100	708.100	708.100	708.100
3	PLINTH CORNER PART H200mm (H2)	708.200	708.200	708.200	708.200	708.200	708.200	708.200	708.200
4	PLINTH FRONT COVERS H100mm (H2)	709.140	709.160	709.170	709.180	709.180	709.100	709.100	709.120
5	PLINTH SIDE COVERS H100mm (H2)	710.180	710.180	710.180	710.180	710.180	710.180	710.180	710.180
6	REAR PANEL	703.420	703.620	703.720	703.820	703.820	703.020	703.020	703.220
7	FRONT DOOR (SOLID)	724.420	724.620	724.720	724.820	724.821	724.021	724.020	724.220
7	FRONT DOOR (GLAZED)	-	725.620	725.720	725.820	-	-	-	-
8	SIDE PANELS (2 pcs)	706.208	706.208	706.208	706.208	706.208	706.208	706.208	706.208
9	MOUNTING PLATE	-	707.620	707.720	707.820	707.820	707.020	707.020	707.220
10	BAYING KIT	711.000	711.000	711.000	711.000	711.000	711.000	711.000	711.000
11	EYEBOLT(4 pcs.)	612.000	612.000	612.000	612.000	612.000	612.000	612.000	612.000

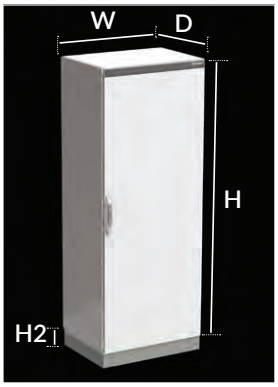

ENCLOSURE DEPTH 600 mm (D)		Height (H) 2200 mm		
		ENCLOSURE WIDTH mm (W)		
Step	Product Description	Single Door 600	Single Door 800	Double Door 1200
1	TOP/BOTTOM GROUP	701.660	701.860	701.260
2	VERTICAL FRAMES GROUP	702.220	702.220	702.220
3	PLINTH CORNER PART H100mm (H2)	708.100	708.100	708.100
3	PLINTH CORNER PART H200mm (H2)	708.200	708.200	708.200
4	PLINTH FRONT COVERS H100mm (H2)	709.160	709.180	709.120
5	PLINTH SIDE COVERS H100mm (H2)	710.160	710.160	710.160
6	REAR PANEL	703.622	703.822	703.222
7	FRONT DOOR (SOLID)	724.622	724.822	724.222
8	SIDE PANELS (2 pcs)	706.226	706.226	706.226
9	MOUNTING PLATE	707.622	707.822	707.222
10	BAYING KIT	711.000	711.000	711.000
11	EYEBOLT(4 pcs.)	612.000	612.000	612.000

SIZES and MODELS (ASSEMBLED)

SOLID DOOR, MOUNTING PLATE						
HEIGHT (H) 1200						Side Panel (2 Pcs)
WIDTH (W)	HEIGHT (H)	DEPTH (D)	Without Plinth	H100 with Plinth	H200 with Plinth	
600	1200	500	706.125.011	706.125.111	706.125.211	706.125
800	1200	500	708.125.011	708.125.111	708.125.211	706.125
1200	1200	500	712.125.011	712.125.111	712.125.211	706.125

SOLID DOOR, Without MOUNTING PLATE						
HEIGHT (H) 1200						Side Panel (2 Pcs)
WIDTH (W)	HEIGHT (H)	DEPTH (D)	Without Plinth	H100 with Plinth	H200 with Plinth	
600	1200	500	706.125.000	706.125.100	706.125.200	706.125
800	1200	500	708.125.000	708.125.100	708.125.200	706.125
1200	1200	500	712.125.000	712.125.100	712.125.200	706.125

ATTENTION : Mounting Plate thickness of the mounting plate is chosen as 3,00 mm as standard.
ATTENTION : Mounting Plate, Side Panel and Plinth are optional as per selection table
REQUIRED : For panel assembly, a baying kit is required for each baying point. Baying Kit **Product Code: 711.000**
SUPPLY INCLUDES : Top / Bottom Group, Vertical Frame Group, Front Door, Rear Panel

SOLID DOOR, MOUNTING PLATE						
HEIGHT (H) 1600						Side Panel (2 Pcs)
WIDTH (W)	HEIGHT (H)	DEPTH (D)	Without Plinth	H100 with Plinth	H200 with Plinth	
600	1200	500	706.165.011	706.165.111	706.165.211	706.165
800	1200	500	708.165.011	708.165.111	708.165.211	706.165
1200	1200	500	712.165.011	712.165.111	712.165.211	706.165

SOLID DOOR, Without MOUNTING PLATE						
HEIGHT (H) 1600						Side Panel (2 Pcs)
WIDTH (W)	HEIGHT (H)	DEPTH (D)	Without Plinth	H100 with Plinth	H200 with Plinth	
600	1200	500	706.165.000	706.165.100	706.165.200	706.165
800	1200	500	708.165.000	708.165.100	708.165.200	706.165
1200	1200	500	712.165.000	712.165.100	712.165.200	706.165

ATTENTION : Mounting Plate thickness of the mounting plate is chosen as 3,00 mm as standard.
ATTENTION : Mounting Plate, Side Panel and Plinth are optional as per selection table
REQUIRED : For panel assembly, a baying kit is required for each baying point. Baying Kit **Product Code: 711.000**
SUPPLY INCLUDES : Top / Bottom Group, Vertical Frame Group, Front Door, Rear Panel

SIZES and MODELS (ASSEMBLED)

HEIGHT (H) 1800		SOLID DOOR, MOUNTING PLATE			SOLID DOOR, Without MOUNTING PLATE		
WIDTH (W)	DEPTH (D)	Without Plinth	H100 with Plinth	H200 with Plinth	Without Plinth	H100 with Plinth	H200 with Plinth
400	500	704.185.011	704.185.111	704.185.211	704.185.000	704.185.100	704.185.200
400	600	704.186.011	704.186.111	704.186.211	704.186.000	704.186.100	704.186.200
600	400	706.184.011	706.184.111	706.184.211	706.184.000	706.184.100	706.184.200
600	500	706.185.011	706.185.111	706.185.211	706.185.000	706.185.100	706.185.200
600	600	706.186.011	706.186.111	706.186.211	706.186.000	706.186.100	706.186.200
800	400	708.184.011	708.184.111	708.184.211	708.184.000	708.184.100	708.184.200
800	500	708.185.011	708.185.111	708.185.211	708.185.000	708.185.100	708.1852.00
800	600	708.186.011	708.186.111	708.186.211	708.186.000	708.186.100	708.186.200
1000	400	710.184.011	710.184.111	710.184.211	710.184.000	710.184.100	710.184.200
1000	500	710.185.011	710.185.111	710.185.211	710.185.000	710.185.100	710.185.200
1000	600	710.186.011	710.186.111	710.186.211	710.186.000	710.186.100	710.186.200
1200	400	712.184.011	712.184.111	712.184.211	712.184.000	712.184.100	712.184.200
1200	500	712.185.011	712.185.111	712.185.211	712.185.000	712.185.100	712.185.200
1200	600	712.186.011	712.186.111	712.186.211	712.186.000	712.186.100	712.186.200

Height (H) 1800		GLAZED DOOR, MOUNTING PLATE			GLAZED DOOR, without MOUNTING PLATE		
Width (W)	Depth (D)	Without Plinth	H100 with Plinth	H200 with Plinth	Without Plinth	H100 with Plinth	H200 with Plinth
600	400	776.184.011	776.184.111	776.184.211	776.184.000	776.184.100	776.184.200
600	500	776.185.011	776.185.111	776.185.211	776.185.000	776.185.100	776.185.200
600	600	776.186.011	776.186.111	776.186.211	776.186.000	776.186.100	776.186.200
800	400	778.184.011	778.184.111	778.184.211	778.184.000	778.184.100	778.184.200
800	500	778.185.011	778.185.111	778.185.211	778.185.000	778.185.100	778.185.200
800	600	778.186.011	778.186.111	778.186.211	778.186.000	778.186.100	778.186.200

ATTENTION : Mounting Plate thickness of the mounting plate is chosen as 3,00 mm as standard.
ATTENTION : Mounting Plate, Side Panel and Plinth are optional as per selection table
REQUIRED : For panel assembly, a baying kit is required for each baying point. Baying Kit **Product Code: 711.000**
SUPPLY INCLUDES : Top / Bottom Group, Vertical Frame Group, Front Door, Rear Panel

SIZES and MODELS (ASSEMBLED)

Height (H) 2000		SOLID DOOR, MOUNTING PLATE			SOLID DOOR, Without MOUNTING PLATE		
Width (W)	Depth (D)	Without Plinth	H100 with Plinth	H200 with Plinth	Without Plinth	H100 with Plinth	H200 with Plinth
400	500	704.205.011	704.205.111	704.205.211	704.205.000	704.205.100	704.205.200
400	600	704.206.011	704.206.111	704.206.211	704.206.000	704.206.100	704.206.200
400	800	704.208.011	704.208.111	704.208.211	704.208.000	704.208.100	704.208.200
600	400	706.204.011	706.204.111	706.204.211	706.204.000	706.204.100	706.204.200
600	500	706.205.011	706.205.111	706.205.211	706.205.000	706.205.100	706.205.200
600	600	706.206.011	706.206.111	706.206.211	706.206.000	706.206.100	706.206.200
600	800	706.208.011	706.208.111	706.208.211	706.208.000	706.208.100	706.208.200
600	1000	706.200.011	706.200.111	706.200.211	706.200.000	706.210.000	706.220.000
700	400	707.204.011	707.204.111	707.204.211	707.204.000	707.204.100	707.204.200
700	500	707.20.5011	707.205.111	707.205.211	707.205.000	707.205.100	707.205.200
700	600	707.206.011	707.206.111	707.206.211	707.206.000	707.206.100	707.206.200
700	800	707.208.011	707.208.111	707.208.211	707.208.000	707.208.100	707.208.200
800	400	708.204.011	708.204.111	708.204.211	708.204.000	708.204.100	708.204.200
800	500	708.205.011	708.205.111	708.205.211	708.205.000	708.205.100	708.205.200
800	600	708.206.011	708.206.111	708.206.211	708.206.000	708.206.100	708.206.200
800	800	708.208.011	708.208.111	708.208.211	708.208.000	708.208.100	708.208.200
800	1000	708.200.011	708.200.111	708.200.211	708.200.000	708.210.000	708.220.000
1000	400	710.204.011	710.204.111	710.204.211	710.204.000	710.204.100	710.204.200
1000	500	710.205.011	710.205.111	710.205.211	710.205.000	710.205.100	710.205.200
1000	600	710.206.011	710.206.111	710.206.211	710.206.000	710.206.100	710.206.200
1000	800	710.208.011	710.208.111	710.208.211	710.208.000	710.208.100	710.208.200
1200	400	712.204.011	712.204.111	712.204.211	712.204.000	712.204.100	712.204.200
1200	500	712.205.011	712.205.111	712.205.211	712.205.000	712.205.100	712.205.200
1200	600	712.206.011	712.206.111	712.206.211	712.206.000	712.206.100	712.206.200
1200	800	712.208.011	712.208.111	712.208.211	712.208.000	712.208.100	712.208.200

ATTENTION : Mounting Plate thickness of the mounting plate is chosen as 3,00 mm as standard.
ATTENTION : Mounting Plate, Side Panel and Plinth are optional as per selection table
REQUIRED : For panel assembly, a baying kit is required for each baying point. Baying Kit **Product Code: 711.000**
SUPPLY INCLUDES : Top / Bottom Group, Vertical Frame Group, Front Door, Rear Panel

SIZES and MODELS (ASSEMBLED)

Height (H) 2000		GLAZED DOOR, MOUNTING PLATE			Side Panel (2 Pcs)	GLAZED DOOR, without MOUNTING PLATE		
Width (W)	Depth (D)	Without Plinth	H100 with Plinth	H200 with Plinth		Without Plinth	H100 with Plinth	H200 with Plinth
600	400	776.204.011	776.204.111	776.204.211	706.204	776.204.000	776.204.100	776.204.200
600	500	776.205.011	776.205.111	776.205.211	706.205	776.205.000	776.205.100	776.205.200
600	600	776.206.011	776.206.111	776.206.211	706.206	776.206.000	776.206.100	776.206.200
600	800	776.208.011	776.208.111	776.208.211	706.208	776.208.000	776.208.100	776.208.200
600	1000	776.200.011	776.200.111	776.200.211	706.200	776.200.000	776.210.000	776.220.000
700	400	777.204.011	777.20.4111	777.204.211	706.204	777.204.000	777.204.100	777.204.200
700	500	777.205.011	777.205.111	777.205.211	706.205	777.205.000	777.205.100	777.205.200
700	600	777.206.011	777.206.111	777.206.211	706.206	777.206.000	777.206.100	777.206.200
700	800	777.208.011	777.208.111	777.208.211	706.208	777.208.000	777.208.100	777.208.200
800	400	778.204.011	778.204.111	778.204.211	706.204	778.204.000	778.204.100	778.204.200
800	500	778.205.011	778.205.111	778.205.211	706.205	778.205.000	778.205.100	778.205.200
800	600	778.206.011	778.206.111	778.206.211	706.206	778.206.000	778.206.100	778.206.200
800	800	778.208.011	778.208.111	778.208.211	706.208	778.208.000	778.208.100	778.208.200
800	1000	778.200.011	778.200.111	778.200.211	706.200	778.200.000	778.210.100	778.210.200

ATTENTION : Mounting Plate thickness of the mounting plate is chosen as 3,00 mm as standard.
ATTENTION : Mounting Plate, Side Panel and Plinth are optional as per selection table
REQUIRED : For panel assembly, a baying kit is required for each baying point. Baying Kit **Product Code: 711.000**
SUPPLY INCLUDES : Top / Bottom Group, Vertical Frame Group, Front Door, Rear Panel

SOLID DOOR, MOUNTING PLATE						
Height (H) 2200						Side Panel (2 Pcs)
Width (W)	Height (H)	Depth (D)	Without Plinth	H100 with Plinth	H200 with Plinth	
600	2200	600	706.226..011	706.226.111	706.165.211	706.226
800	2200	600	708.226011	708.226.111	708.165.211	706.226
1200	2200	600	712.226.011	712.226.111	712.165.211	706.226

SOLID DOOR, without MOUNTING PLATE						
Height (H) 2200						Side Panel (2 Pcs)
Width (W)	Height (H)	Depth (D)	Without Plinth	H100 with Plinth	H200 with Plinth	
600	2200	600	706.226.000	706.226.100	706.226.200	706.226
800	2200	600	708.226.000	708.226.100	708.226.200	706.226
1200	2200	600	712.226.000	712.226.100	712.226.200	706.226

ATTENTION : Mounting Plate thickness of the mounting plate is chosen as 3,00 mm as standard.
ATTENTION : Mounting Plate, Side Panel and Plinth are optional as per selection table
REQUIRED : For panel assembly, a baying kit is required for each baying point. Baying Kit **Product Code: 711.000**
SUPPLY INCLUDES : Top / Bottom Group, Vertical Frame Group, Front Door, Rear Panel

c UL us

CE

EAC

IEC

RoHS

DEKRA

FLOORSTANDING CABINET

HIGHLIGHTS

FRAME STRUCTURE

- 2 welded front-rear frames which made by 1,50 mm material
- Semi-closed vertical and Width profiles
- Closed depth profiles

EARTHING CONTINUITY

- Earthing continuity thanks to welded vertical and horizontal profiles
- Earthing continuity thanks to special design of fastener between front-rear frames and depth profiles.

FRONT DOOR and LOCKING SYSTEM

- 4 points locking and hinging system on the outside of the frame
- Push button working system of swing handle
- Modifiable insert system from cylinder inserts to other universal inserts like doublebit, square etc.
- Perforated door stiffeners in largest positioning.

HIGHLIGHTS

IP PROTECTION and NEMA CATEGORIES

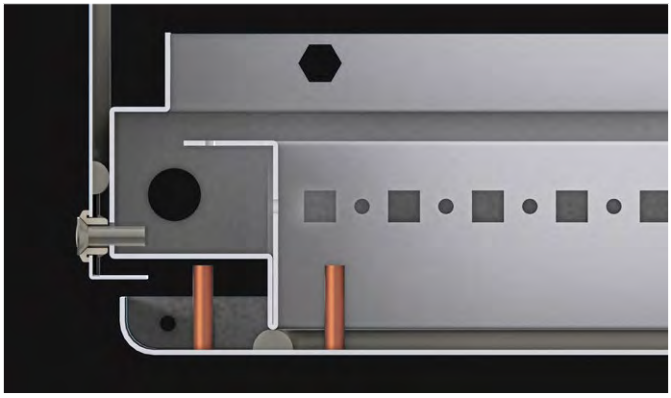

- IP 54 Protection related to EN 60 529 and NEMA 1 provided for Double Door.
- Using gasket for all door, rear door, side panel top cover etc. Due to this gasket,without any opreration, full isolation is provided between -40°C & +100°C

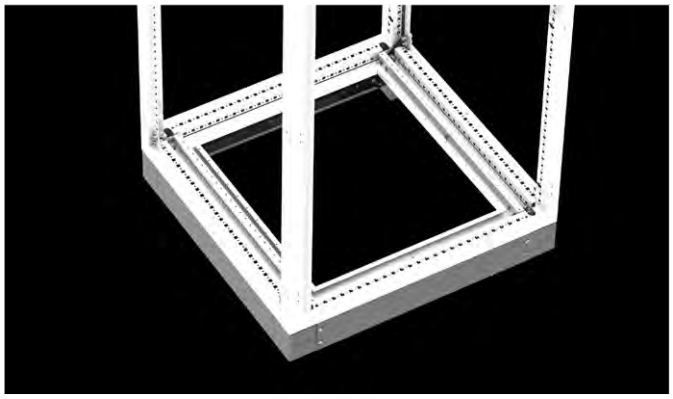

- IP 55 Protection related to EN 60 529 and NEMA 12 provided for Single Door.
- Using gasket for all door, rear door, side panel top cover etc. Due to this gasket,without any opreration, full isolation is provided between -40°C & +100°C

ASSEMBLING AND LOGISTICAL ADVANTAGES

ASSEMBLING STEP 1

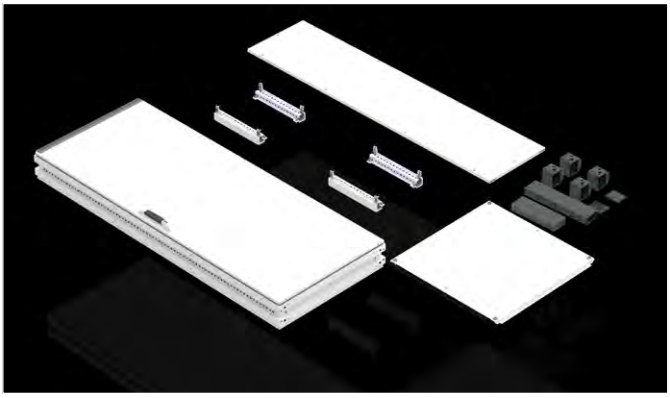

ASSEMBLING STEP 2

ASSEMBLING STEP 3

ASSEMBLING STEP 4

- Offered as flat package, the NEO Modular system is designed for an easy mounting in minimal amount of time. It does not require angulation for body and can be mounted 15-20 min. by two person.
- Offered as flat package, the NEO Modular system saves space during transportation and storage.

You can access
the NEO Modular assembly video
by scanning the QR code.

ASSEMBLING AND LOGISTICAL ADVANTAGES

MOUNTING PLATE SYSTEM

- Neo Modular and Neo Monoblock frame system are same as Teos frame related with the internal dimensions. Therefore Mounting plate system of Teos which includes 3mm thickness and 2mm thickness can adapte to Neo Modular and Neo monoblock design.

PLINTH SYSTEM

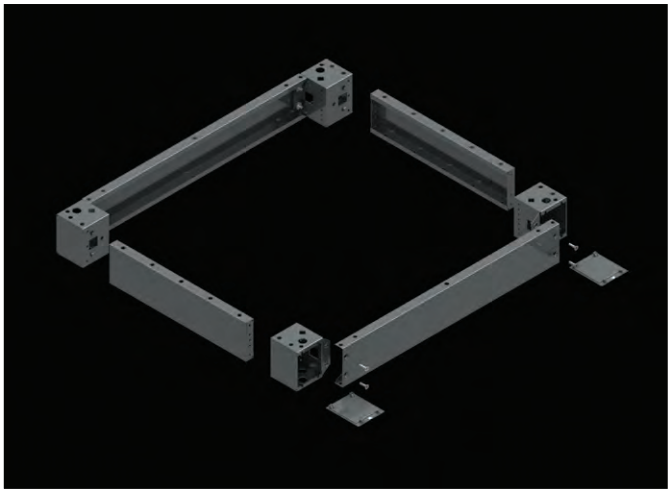

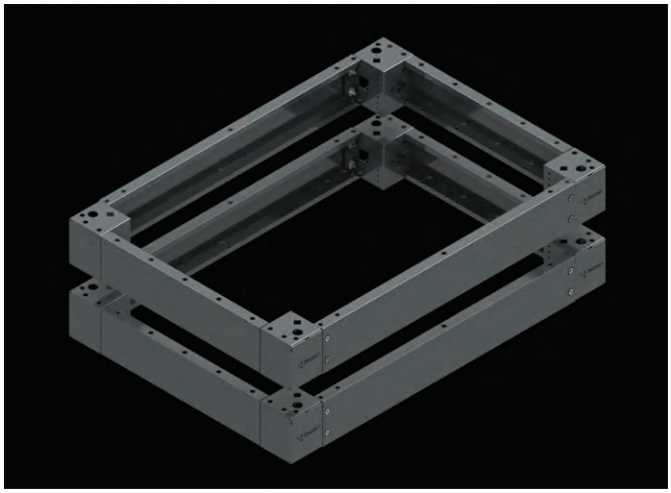

- Neo Modular and Neo monoblock frame system are same as Teos frame related with the bottom dimensions. Therefore plinth system of TEOS which includes H100mm and H200mm version can adapte to Neo Modular and Neo monoblock design.

SIZES and MODELS (DISASSEMBLED)

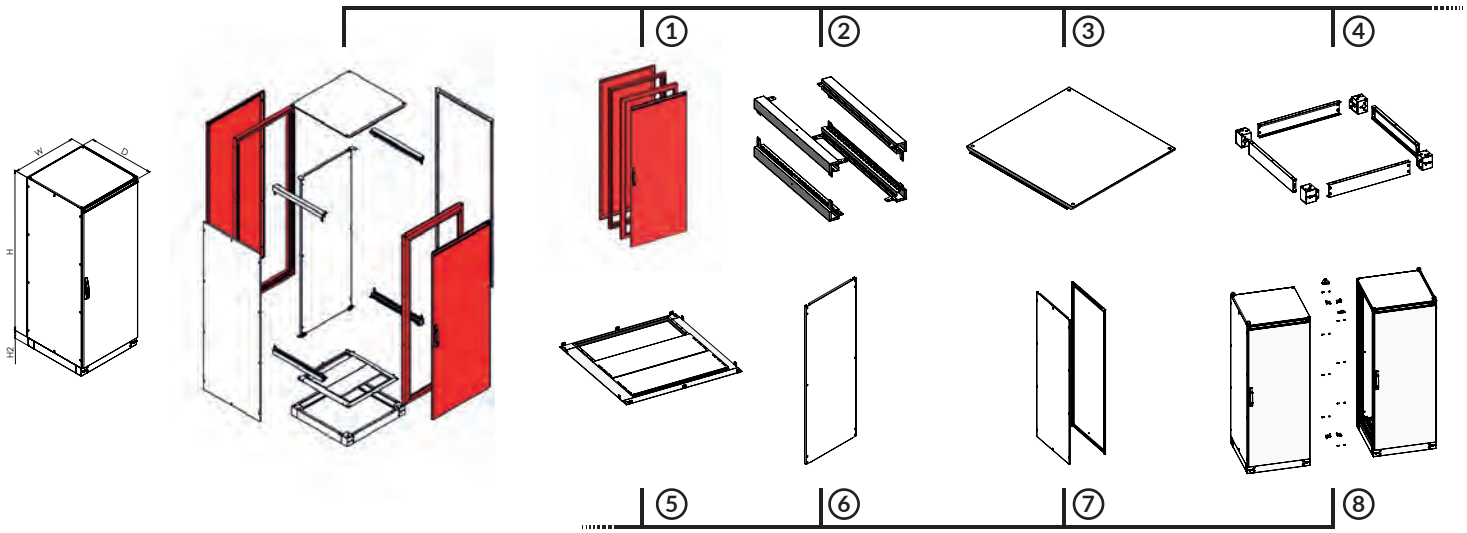

STEP 1 – MAIN BODY GROUP

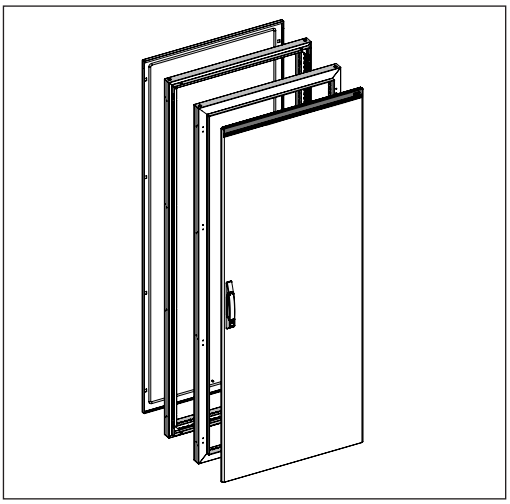

Material :
Welded frames : 1,50 mm Galvanized steel + RAL 7035 powder coated
Front door.: 1,50 mm mild steel+ RAL 7035 powder coated
Rear Panel : 1,20 mm mild steel + RAL powder coated

Supply Includes :
2 pcs welded frame, 1 pcs front door, 1 pcs rear panel, lock-parts, hinges and required assembling parts.

NOTE : There are 2 version in selection. Version 1 is solid design. Version 2 is glazed door
NOTE : 1000W and 1200W width enclosures are double doors.

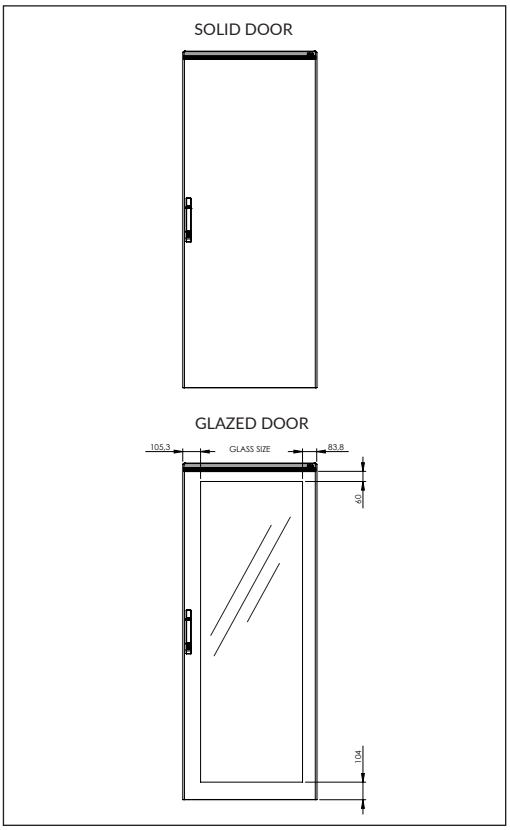

PRODUCT CODE		ENCLOSURE DIMENSION	
VERSION 1 SOLID DOOR	VERSION 2 GLAZED DOOR	HEIGHT (mm)	Width (mm)
616.121		1200	600
618.121		1200	800
616.161		1600	600
618.161		1600	800
616.181	616.182	1800	600
618.181	618.182	1800	800
610.181		1800	1000
612.181		1800	1200
614.201		2000	400
616.201	616.202	2000	600
617.201	617.202	2000	700
618.201	618.202	2000	800
610.201		2000	1000
612.201		2000	1200

SIZES and MODELS (DISASSEMBLED)

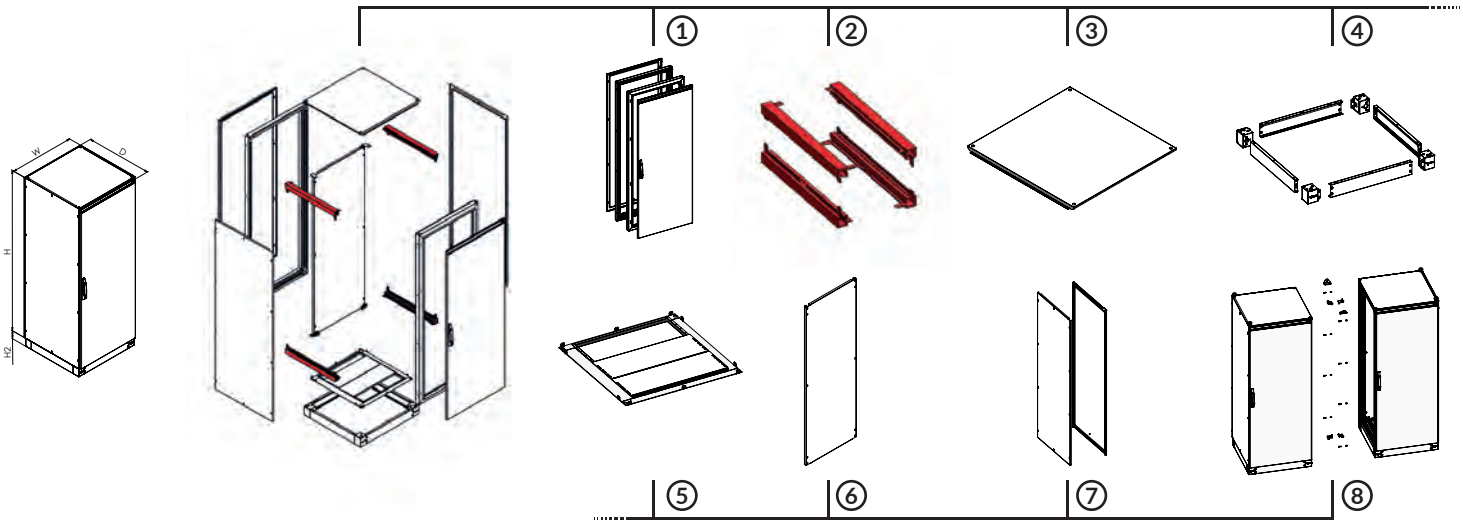

STEP 2 – FRAME DEPTH PARTS

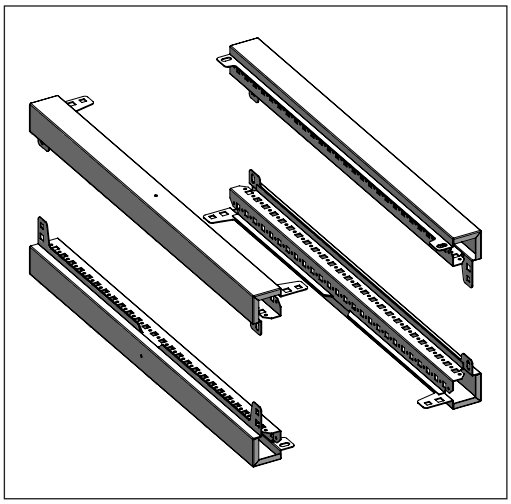

Materials :
Depth parts : 1,50 mm Galvanized + RAL 7035 powder coated

Supply Includes :
4 pcs frame depth parts and required assembling parts

PRODUCT CODE	ENCLOSURE DEPTH (mm)
620.400	400
620.500	500
620.600	600
620.800	800

SIZES and MODELS (DISASSEMBLED)

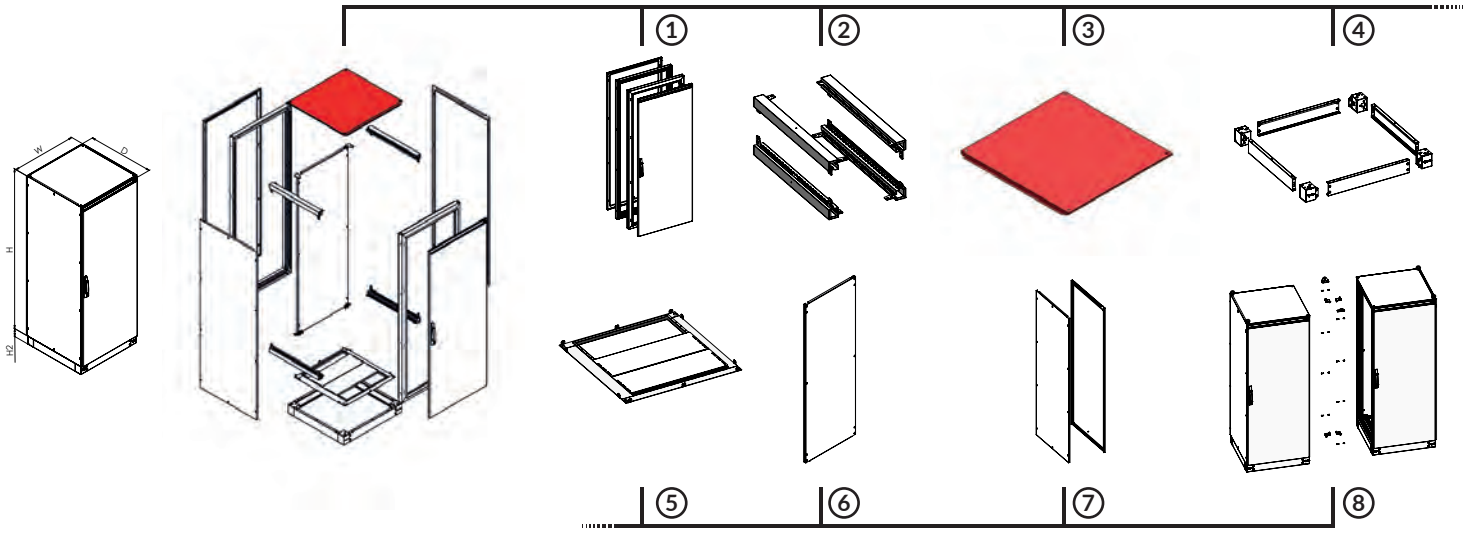

STEP 3 – TOP COVER

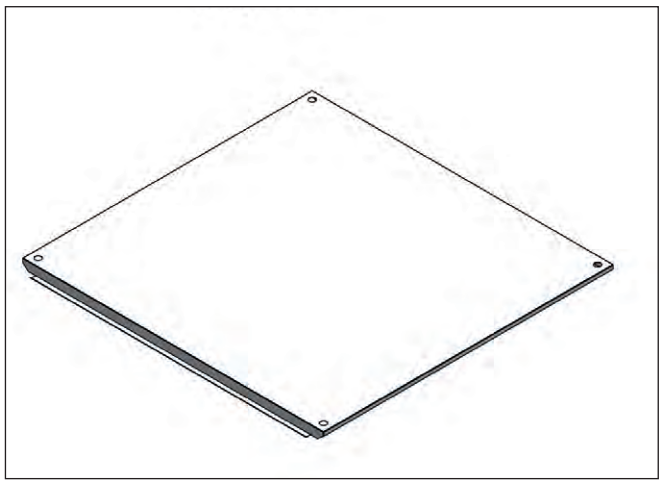

Materials :
1,20 mm mild steel+ RAL 7035 powder coating

Supply Includes :
1 pcs top cover and required assembling parts

PRODUCT CODE	ENCLOSURE DIMENSION	
	Width (mm)	Depth (mm)
624.500	400	500
624.600	400	600
624.800	400	800
626.400	600	400
626.500	600	500
626.600	600	600
626.800	600	800
627.400	700	400
627.500	700	500
627.600	700	600
627.800	700	800

PRODUCT CODE	ENCLOSURE DIMENSION	
	Width (mm)	Depth (mm)
628.400	800	400
628.500		500
628.600		600
628.800		800
621.400	1000	400
621.500		500
621.600		600
621.800		800
622.400	1200	400
622.500		500
622.600		600
622.800		800

SIZES and MODELS (DISASSEMBLED)

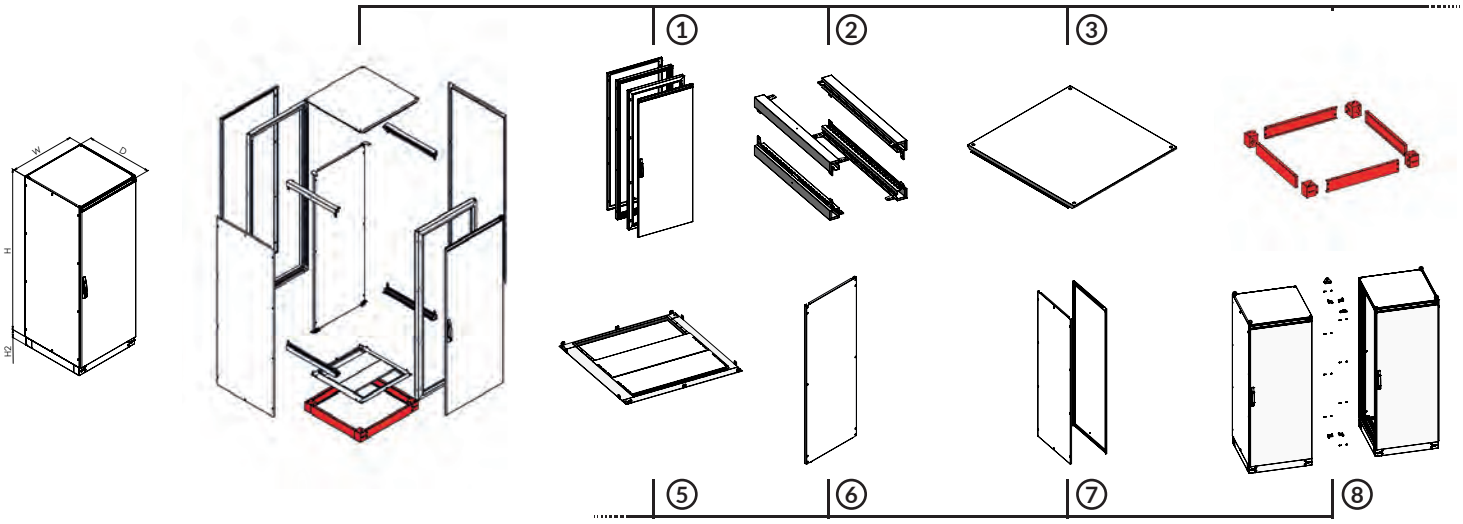

STEP 4 – PLINTH PARTS

The design of Neo frame is same as Teos frame bottom sizes. Thanks to this advantage, plinth parts of Teos are avaible to assemble to NEO system.

PLINTH CORNER PART

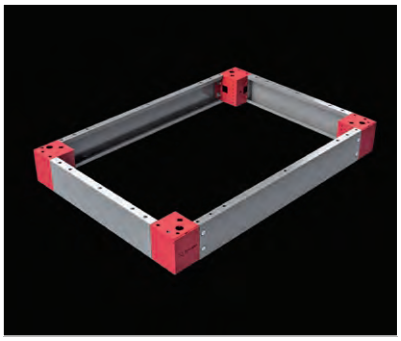

Material :
Corner part : 2,00 mm galvanized steel + RAL 7012 powder coating
Plastic panel : RAL 7012 ABS Plastic

Suplly Includes :4 pcs 100 mm or 200 mm high plinth corner part, 4 pcs plastic panel and mounting parts.

PRODUCT CODE	TEOS PLINTH HEIGHT (mm)
708.100	100
708.200	200

PLINTH FRONT COVER

Material :
100 mm plinth front cover : 1,50 mm galvanized steel + RAL 7012 powder coating

Suplly Includes 2 pcs 100 mm high plinth corner part, mounting parts.

REQUIRED : 2 set of side plinth cover group for 200 mm height plints

PRODUCT CODE	ENCLOSURE WIDTH (mm)
709.140	400
709.160	600
709.170	700
709.180	800
709.100	1000
709.120	1200

PLINTH SIDE COVER

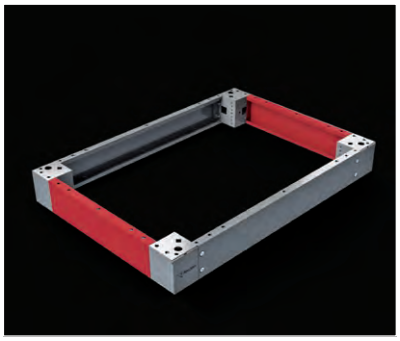

Material :
100 mm plinth side cover : 1,50 mm galvanized steel + RAL 7012 powder coating

Suplly Includes 2 pcs 100 mm high plinth side part, mounting parts.

REQUIRED : 2 set of side plinth cover group for 200 mm height plints

PRODUCT CODE	ENCLOSURE DEPTH (mm)
710.140	400
710.150	500
710.160	600
710.180	800

SIZES and MODELS (DISASSEMBLED)

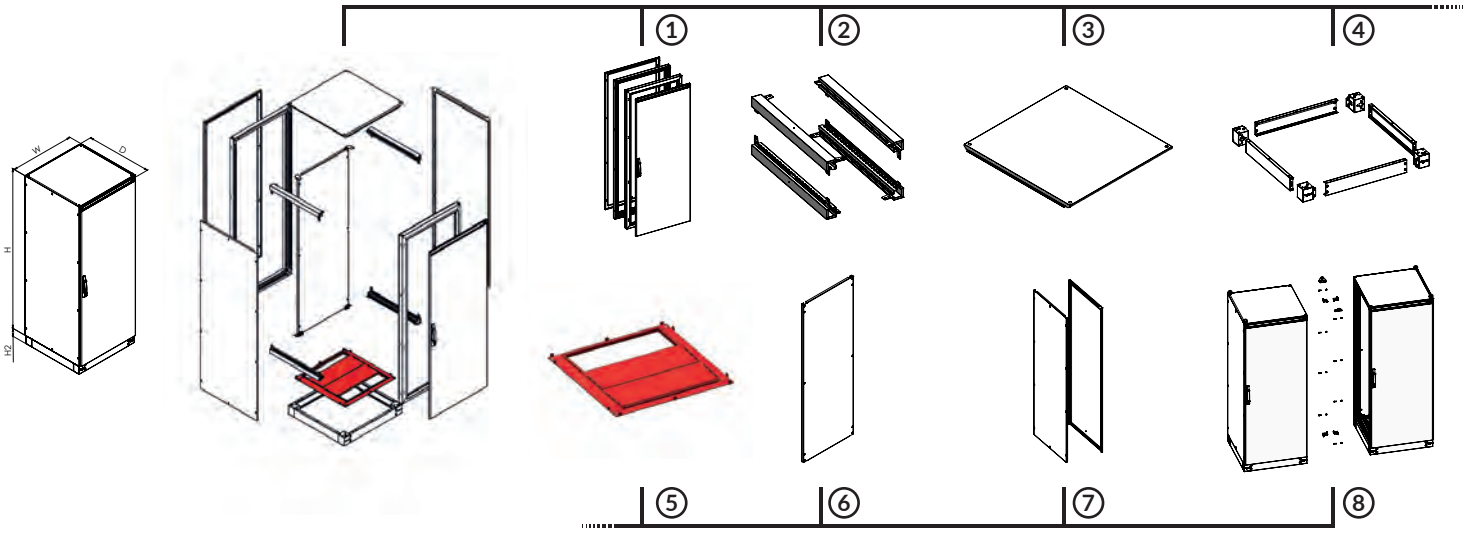

STEP 5 – GLAND PLATE SYSTEM

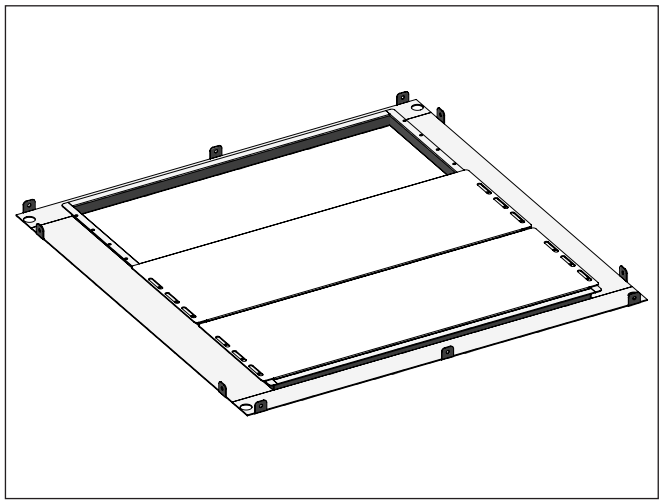

Material :
Plate holder: 1,50 mm galvanized steel + RAL 7035 powder coating
Gland Plates : 1,50 mm galvanized steel

Supply Includes :
2 pcs width plate holders, 2 pcs depth plate holders, 3 or 4 pcs gland plates related with depth size

NOTE : The design of Neo frame is same as Teos frame bottom sizes. Thanks to this advantage, plinth parts of Teos are avaible to

PRODUCT CODE	ENCLOSURE DIMENSIONS	
	WIDTH (mm)	DEPTH (mm)
634.500	400	500
634.600	400	600
634.800	400	800
636.400	600	400
636.500	600	500
636.600	600	600
636.800	600	800
637.400	700	400
637.500	700	500
637.600	700	600
637.800	700	800

PRODUCT CODE	ENCLOSURE DIMENSIONS	
	Width (mm)	Depth (mm)
638.400	800	400
638.500	800	500
638.600	800	600
638.800	800	800
631.400	1000	400
631.500	1000	500
631.600	1000	600
631.800	1000	800
632.400	1200	400
632.500	1200	500
632.600	1200	600
632.800	1200	800

SIZES and MODELS (DISASSEMBLED)

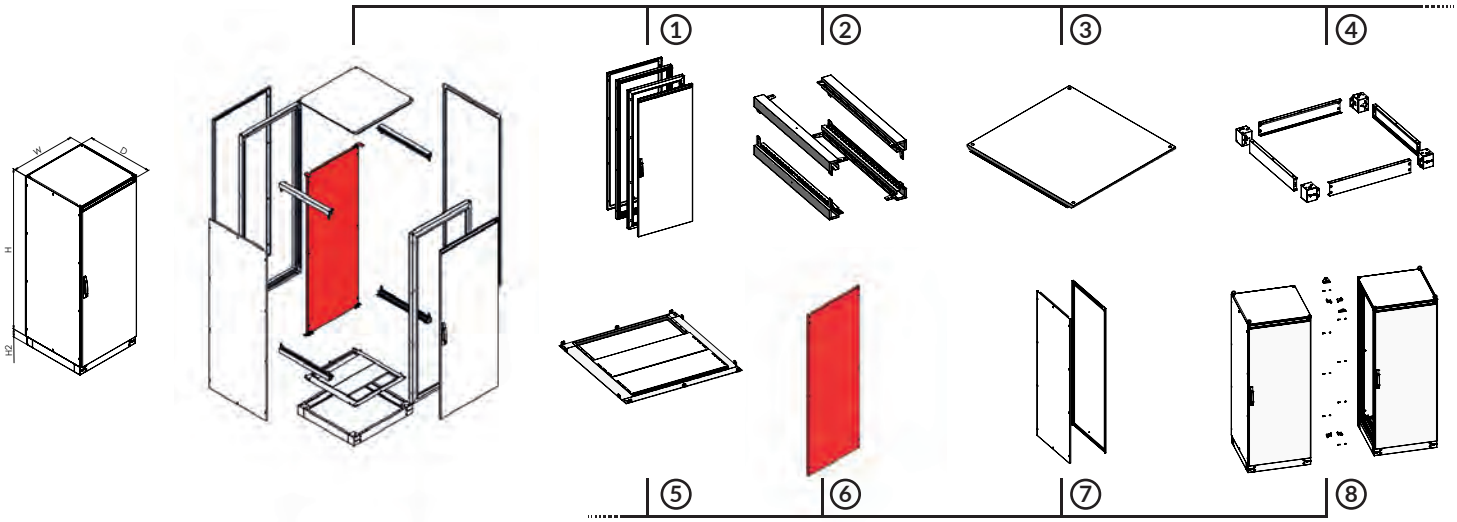

STEP 6 – MOUNTING PLATE (3 mm thickness)

Material:
3,00 mm galvanized steel

Supply Includes :
1 pcs mounting plate and assembling parts

	Height (mm)			
Width (mm)	1200	1600	1800	2000
400	-	-	707.418	707.420
600	707.612	707.618	707.616	707.620
700	-	-	-	707.720
800	707.812	707.818	707.816	707.820
1000	-	707.018	-	707.020
1200	-	707.218	-	707.220

STEP 6 – MOUNTING PLATES (2 mm thickness)

Material:
2,00 mm galvanized steel

Supply Includes :
1 pcs mounting plate and assembling parts

	Height (mm)			
Width (mm)	1200	1600	1800	2000
400	-	-	717.418	717.420
600	717.612	717.618	717.616	717.620
700	-	-	-	717.720
800	717.812	717.818	717.816	717.820

SIZES and MODELS (DISASSEMBLED)

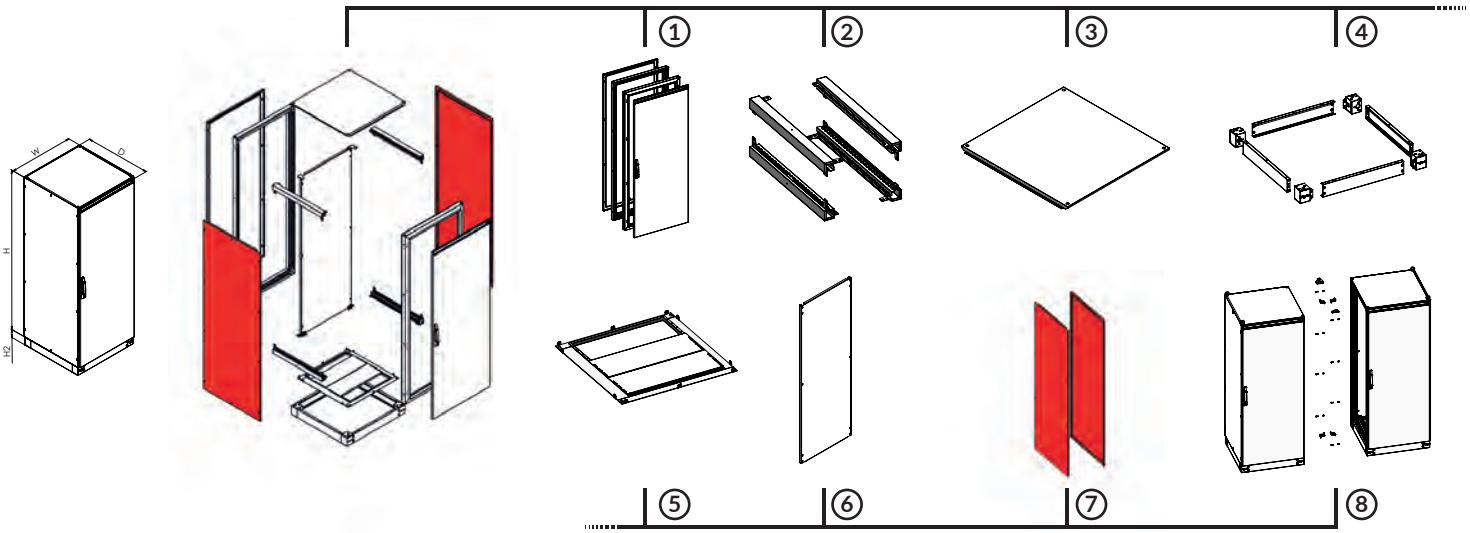

STEP 7 – SIDE PANEL (2 pcs)

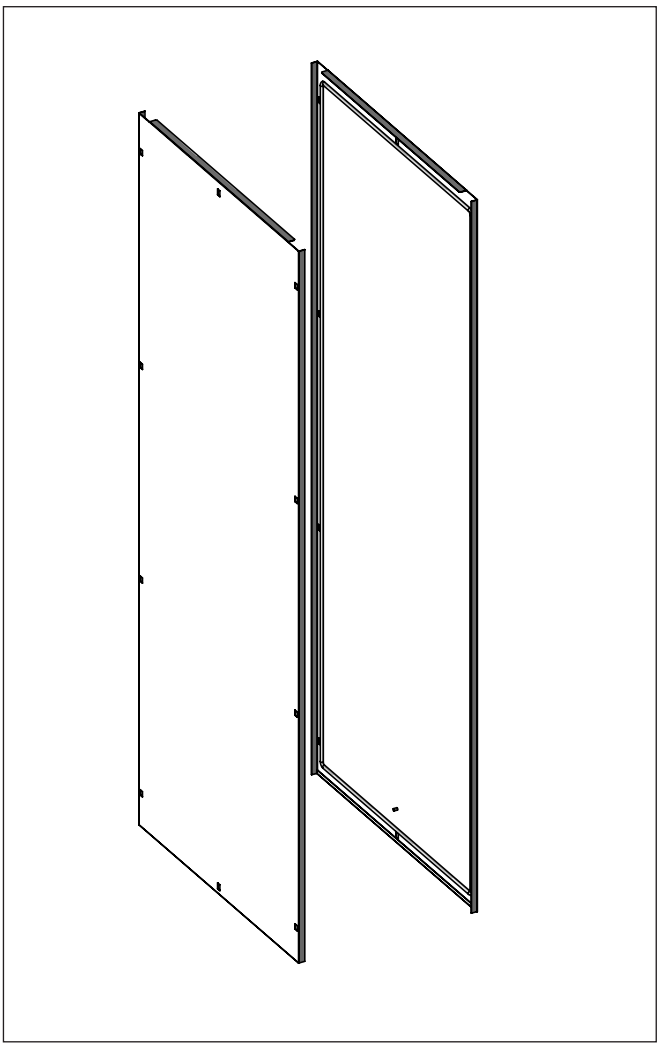

Material:
1,20 mm mild steel + RAL 7035 powder coating

Supply Includes : 2 pcs side panel and assembling parts

PRODUCT CODE	ENCLOSURE DIMENSION	
	Width (mm)	Depth (mm)
632.125	1200	500
632.165	1600	500
632.184	1800	400
632.185	1800	500
632.186	1800	600
632.204	2000	400
632.205	2000	500
632.206	2000	600
632.208	2000	800

SIZES and MODELS (DISASSEMBLED)

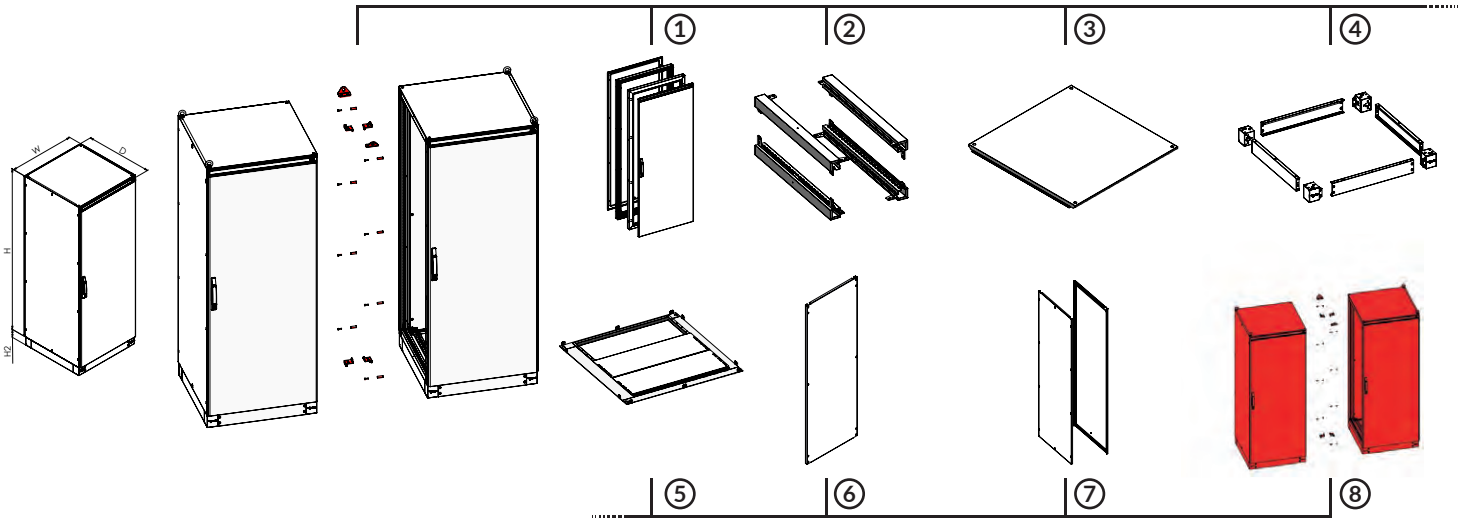

STEP 8 – BAYING KIT

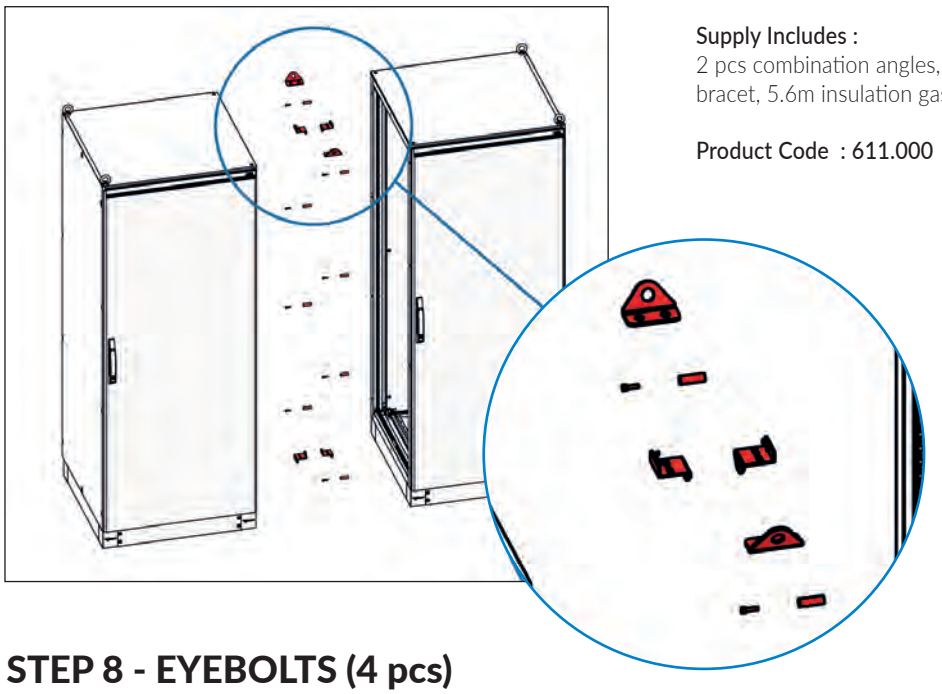

Supply Includes :
2 pcs combination angles, 8 set M6 fasteners, 2 pcs adjustable bracet, 5.6m insulation gasket and assembling parts

Product Code : 611.000

STEP 8 - EYEBOLTS (4 pcs)

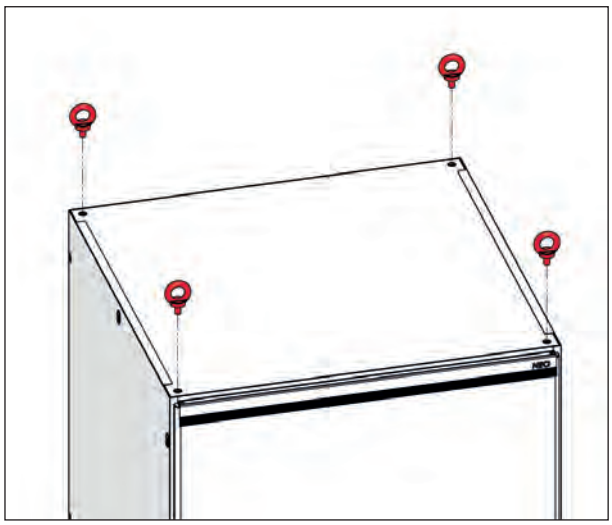

Supply Includes :
4 pcs M12 eyebolts **Product Code : 612.000**

Note : It is required for each cubic and combination panels. This accessory is not included in standart package.

SIZES and MODELS (DISASSEMBLED)

ENCLOSURE DEPTH 500 mm (D)		Height 1200 mm	
		ENCLOSURE WIDTH mm (W)	
Step	Product Description	Single Door 600	Single Door 800
1	BODY GROUP	616.121	618.121
2	DEPTH PARTS	620.500	620.500
3	TOP COVER	626.500	628.500
4(1)	PLINTH CORNER H100(H2)	708.100	708.100
4(1)	PLINTH CORNER H200(H2)	708.200	708.200
4(2)	PLINTH FRONT COVER H100(H2)	709.160	709.180
4(3)	PLINTH SIDE COVER H100(H2)	710.150	710.150
5	GLAND PLATE SYSTEM	636.500	638.500
6	MOUNTING PLATE 2,00mm	717.612	717.812
6	MOUNTING PLATE 3,00mm	707.612	707.812
7	SIDE PANEL	632.125	632.125
8(1)	NEO BAYING KIT	611.000	611.000
8(2)	EYEBOLT(4 pcs.)	612.000	612.000

ENCLOSURE DEPTH 500 mm (D)		Height 1600 mm	
		ENCLOSURE WIDTH mm	
Step	Product Description	Single Door 600	Single Door 800
1	BODY GROUP	616.161	618.161
2	DEPTH PARTS	620.500	620.500
3	TOP COVER	626.500	628.500
4(1)	PLINTH CORNER H100(H2)	708.100	708.100
4(1)	PLINTH CORNER H200(H2)	708.200	708.200
4(2)	PLINTH FRONT COVER H100(H2)	709.160	709.180
4(3)	PLINTH SIDE COVER H100(H2)	710.150	710.150
5	GLAND PLATE SYSTEM	636.500	638.500
6	MOUNTING PLATE 2,00mm	717.616	717.816
6	MOUNTING PLATE 3,00mm	707.616	707.816
7	SIDE PANEL	632.165	632.165
8(1)	NEO BAYING KIT	611.000	611.000
8(2)	EYEBOLT(4 pcs.)	612.000	612.000

ENCLOSURE DEPTH 400 mm		Height 1800 mm			
		ENCLOSURE WIDTH mm			
Step	Product Description	Single Door 600	Single Door 800	Double Door 1000	Double Door 1200
1	BODY GROUP	616.181	618.181	610.181	612.181
2	DEPTH PARTS	620.400	620.400	620.400	620.400
3	TOP COVER	626.400	628.400	621.400	622.400
4(1)	PLINTH CORNER H100(H2)	708.100	708.100	708.100	708.100
4(1)	PLINTH CORNER H200(H2)	708.200	708.200	708.200	708.200
4(2)	PLINTH FRONT COVER H100(H2)	709.160	709.180	709.100	709.120
4(3)	PLINTH SIDE COVER H100(H2)	710.140	710.140	710.140	710.140
5	GLAND PLATE SYSTEM	636.400	638.400	631.400	632.400
6	MOUNTING PLATE 2,00mm	717.618	717.818	*	*
6	MOUNTING PLATE 3,00mm	707.618	707.818	707.018	707.218
7	SIDE PANEL	632.184	632.184	632.184	632.184
8(1)	NEO BAYING KIT	611.000	611.000	611.000	611.000
8(2)	EYEBOLT(4 pcs.)	612.000	612.000	612.000	612.000

SIZES and MODELS (DISASSEMBLED)

ENCLOSURE DEPTH 500 mm (D)		Height 1800 mm			
		ENCLOSURE WIDTH mm (W)			
Step	Product Description	Single Door 600	Single Door 800	Double Door 1000	Double Door 1200
1	BODY GROUP	616.181	618.181	610.181	612.181
2	DEPTH PARTS	620.500	620.500	620.500	620.500
3	TOP COVER	626.500	628.500	621.500	622.500
4(1)	PLINTH CORNER H100(H2)	708.100	708.100	708.100	708.100
4(1)	PLINTH CORNER H200(H2)	708.200	708.200	708.200	708.200
4(2)	PLINTH FRONT COVER H100(H2)	709.160	709.180	709.100	709.120
4(3)	PLINTH SIDE COVER H100(H2)	710.150	710.150	710.150	710.150
5	GLAND PLATE SYSTEM	636.500	638.500	631.500	632.500
6	MOUNTING PLATE 2,00mm	717.618	717.818	*	*
6	MOUNTING PLATE 3,00mm	707.618	707.818	707.018	707.218
7	SIDE PANEL	632.185	632.185	632.185	632.185
8(1)	NEO BAYING KIT	611.000	611.000	611.000	611.000
8(2)	EYEBOLT(4 pcs.)	612000	612000	612000	612000

ENCLOSURE DEPTH 600 mm (D)		Height 1800 mm			
		ENCLOSURE WIDTH mm			
Step	Product Description	Single Door 600	Single Door 800	Double Door 1000	Double Door 1200
1	BODY GROUP	616.181	618.181	610.181	612.181
2	DEPTH PARTS	620.600	620.600	620.600	620.600
3	TOP COVER	626.600	628.600	621.600	622.600
4(1)	PLINTH CORNER H100(H2)	708.100	708.100	708.100	708.100
4(1)	PLINTH CORNER H200(H2)	708.200	708.200	708.200	708.200
4(2)	PLINTH FRONT COVER H100(H2)	709.160	709.180	709.100	709.120
4(3)	PLINTH SIDE COVER H100(H2)	710.160	710.160	710.160	710.160
5	GLAND PLATE SYSTEM	636.600	638.600	631.600	632.600
6	MOUNTING PLATE 2,00mm	717.618	717.818	*	*
6	MOUNTING PLATE 3,00mm	707.618	707.818	707.018	707.218
7	SIDE PANEL	632.186	632.186	632.186	632.186
8(1)	NEO BAYING KIT	611.000	611.000	611.000	611.000
8(2)	EYEBOLT(4 pcs.)	612.000	612.000	612.000	612.000

ENCLOSURE DEPTH 400 mm (D)		Height 2000 mm					
		ENCLOSURE WIDTH mm					
Step	Product Description	Single Door 400	Single Door 600	Single Door 700	Single Door 800	Double Door 1000	Double Door 1200
1	BODY GROUP	*	616.201	617.201	618.201	610.201	612.201
2	DEPTH PARTS	*	620.400	620.400	620.400	620.400	620.400
3	TOP COVER	*	626.400	627.400	628.400	621.400	622.400
4(1)	PLINTH CORNER H100(H2)	*	708.100	708.100	708.100	708.100	708.100
4(1)	PLINTH CORNER H200(H2)	*	708.200	708.200	708.200	708.200	708.200
4(2)	PLINTH FRONT COVER H100(H2)	*	709.160	709.170	709.180	709.100	709.120
4(3)	PLINTH SIDE COVER H100(H2)	*	710.140	710.140	710.140	710.140	710.140
5	GLAND PLATE SYSTEM	*	636.400	637.400	638.400	631.400	632.400
6	MOUNTING PLATE 2,00mm	*	717.620	717.720	717.820	*	*
6	MOUNTING PLATE 3,00mm	*	707.620	707.720	707.820	707.020	707.220
7	SIDE PANEL	*	632.204	632.204	632.204	632.204	632.204
8(1)	NEO BAYING KIT	*	611.000	611.000	611.000	611.000	611.000
8(2)	EYEBOLT(4 pcs.)	*	612.000	612.000	612.000	612.000	612.000

SIZES and MODELS (DISASSEMBLED)

ENCLOSURE DEPTH 500 mm		Height 2000 mm					
		ENCLOSURE WIDTH mm					
Step	Product Description	Single Door 400	Single Door 600	Single Door 700	Single Door 800	Double Door 1000	Double Door 1200
1	BODY GROUP	614.201	616.201	617.201	618.201	610.201	612.201
2	DEPTH PARTS	620.500	620.500	620.500	620.500	620.500	620.500
3	TOP COVER	624.500	626.500	627.500	628.500	621.500	622.500
4(1)	PLINTH CORNER H100(H2)	708.100	708.100	708.100	708.100	708.100	708.100
4(1)	PLINTH CORNER H200(H2)	708.200	708.200	708.200	708.200	708.200	708.200
4(2)	PLINTH FRONT COVER H100(H2)	709.140	709.160	709.170	709.180	709.100	709.120
4(3)	PLINTH SIDE COVER H100(H2)	710.150	710.150	710.150	710.150	710.150	710.150
5	GLAND PLATE SYSTEM	634.500	636.500	637.500	638.500	631.500	632.500
6	MOUNTING PLATE 2,00mm	*	717.620	717.720	717.820	*	*
6	MOUNTING PLATE 3,00mm	*	707.620	707.720	707.820	707.020	707.220
7	SIDE PANEL	632.205	632.205	632.205	632.205	632.205	632.205
8(1)	NEO BAYING KIT	611.000	611.000	611..000	611.000	611.000	611.000
8(2)	EYEBOLT(4 pcs.)	612.000	612.000	612.000	612.000	612.000	612.000

ENCLOSURE DEPTH 600 mm		Height 2000 mm					
		ENCLOSURE WIDTH mm					
Step	Product Description	Single Door 400	Single Door 600	Single Door 700	Single Door 800	Double Door 1000	Double Door 1200
1	BODY GROUP	614.201	616.201	617.201	618.201	610.201	612.201
2	DEPTH PARTS	620.600	620.600	620.600	620.600	620.600	620.600
3	TOP COVER	624.600	626.600	627.600	628.600	621.600	622.600
4(1)	PLINTH CORNER H100(H2)	708.100	708.100	708.100	708.100	708.100	708.100
4(1)	PLINTH CORNER H200(H2)	708.200	708.200	708.200	708.200	708.200	708.200
4(2)	PLINTH FRONT COVER H100(H2)	709.140	709.160	709.170	709.180	709.100	709.120
4(3)	PLINTH SIDE COVER H100(H2)	710.150	710.150	710.150	710.150	710.150	710.150
5	GLAND PLATE SYSTEM	634.600	636.600	637.600	638.600	631.600	632.600
6	MOUNTING PLATE 2,00mm	*	717.620	717.720	717.820	*	*
6	MOUNTING PLATE 3,00mm	*	707.620	707.720	707.820	707.020	707.220
7	SIDE PANEL	632.206	632.206	632.206	632.206	632.206	632.206
8(1)	NEO BAYING KIT	611.000	611.000	611.000	611.000	611.000	611.000
8(2)	EYEBOLT(4 pcs.)	612.000	612.000	612.000	612.000	612.000	612.000

ENCLOSURE DEPTH 800 mm		Height 2000 mm					
		ENCLOSURE WIDTH mm					
Step	Product Description	Single Door 400	Single Door 600	Single Door 700	Single Door 800	Double Door 1000	Double Door 1200
1	BODY GROUP	614.201	616.201	617.201	618.201	610.201	612.201
2	DEPTH PARTS	620.800	620.800	620.800	620.800	620.800	620.800
3	TOP COVER	624.800	626.800	627.800	628.800	621.800	622.800
4(1)	PLINTH CORNER H100(H2)	708.100	708.100	708.100	708.100	708.100	708.100
4(1)	PLINTH CORNER H200(H2)	708.200	708.200	708.200	708.200	708.200	708.200
4(2)	PLINTH FRONT COVER H100(H2)	709.140	709.160	709.170	709.180	709.100	709.120
4(3)	PLINTH SIDE COVER H100(H2)	710.150	710.150	710.150	710.150	710.150	710.150
5	GLAND PLATE SYSTEM	634.800	636.800	637.800	638.800	631.800	632.800
6	MOUNTING PLATE 2,00mm	*	717.620	717.720	717.820	*	*
6	MOUNTING PLATE 3,00mm	*	707.620	707.720	707.820	707.020	707.220
7	SIDE PANEL	632.208	632.208	632.208	632.208	632.208	632.208
8(1)	NEO BAYING KIT	611.000	611.000	611.000	611.000	611.000	611.000
8(2)	EYEBOLT(4 pcs.)	612.000	612.000	612.000	612.000	612.000	612.000

SIZES and MODELS (DISASSEMBLED)

SOLID DOOR, MOUNTING PLATE						
Height 1200 mm						Side Panel (2 Pcs)
WIDTH (mm)	HEIGHT (mm)	DEPTH (mm)	Without plinth	H100 Plinth	H200Plinth	
600	1200	500	646.125.011	646.125.111	646.125.211	632.125
800	1200	500	648.125.011	648.125.111	648.125.211	632.125

SOLID DOOR, without MOUNTING PLATE						
Height 1200 mm						Side Panel (2 Pcs)
WIDTH (mm)	HEIGHT (mm)	DEPTH (mm)	Without plinth	H100 Plinth	H200Plinth	
600	1200	500	646.125.000	646.125.100	646.125.200	632.125
800	1200	500	648.125.000	648.125.100	648.125.200	632.125

ATTENTION : Mounting plate's thickness is standard 2mm for 600W-800W, but; for 1000W-1200W chosen 3,00mm thickness.
REQUIRED : For panel assembly, a baying kit is required for each baying point. Baying Kit **Product Code: 611.000**
ATTENTION : If the carrier Eyebolt is required for each column in single column panels and for each combined system in combined systems. Eyebolt(pcs) **Product Code : 612.000**

SOLID DOOR, MOUNTING PLATE						
Height 1600 mm						Side Panel (2 Pcs)
WIDTH (mm)	HEIGHT (mm)	DEPTH (mm)	Without plinth	H100 Plinth	H200Plinth	
600	1600	500	646.165.011	646.165.111	646.165.211	632.165
800	1600	500	648.165.011	648.165.111	648.165.211	632.165

SOLID DOOR, without MOUNTING PLATE						
Height 1600 mm						Side Panel (2 Pcs))
WIDTH (mm)	HEIGHT (mm)	DEPTH (mm)	Without plinth	H100 Plinth	H200Plinth	
600	1600	500	646.165.000	646.165.100	646.165.200	632.165
800	1600	500	648.165.000	648.165.100	648.165.200	632.165

ATTENTION : Mounting plate's thickness is standard 2mm for 400W-800W, but; for 1000W-1200W chosen 3,00mm thickness.
REQUIRED : For panel assembly, a baying kit is required for each baying point. Baying Kit **Product Code: 611.000**
ATTENTION : If the carrier Eyebolt is required for each column in single column panels and for each combined system in combined systems. Eyebolt(pcs) **Product Code : 612.000**

SIZES and MODELS (ASSEMBLED)

Height 1800 mm		SOLID DOOR, MOUNTING PLATE			Side Panel (2 Pcs))	SOLID DOOR, without MOUNTING PLATE		
Width (mm)	Depth (mm)	Without Plinth	H100 with Plinth	H200 with Plinth		Without Plinth	H100 with Plinth	H200 with Plinth
600	400	646.184.011	646.184.111	646.184.211	632.184	646.184.000	646.184.100	646.184.200
600	500	646.185.011	646.185.111	646.185.211	632.185	646.185.000	646.185.100	646.185.200
600	600	646.186.011	646.186.111	646.186.211	632.186	646.186.000	646.186.100	646.186.200
800	400	648.184.011	648.184.111	648.184.211	632.184	648.184.000	648.184.100	648.184.200
800	500	648.185.011	648.185.111	648.185.211	632.185	648.185.000	648.185.100	648.185.200
800	600	648.186.011	648.186.111	648.186.211	632.186	648.186.000	648.186.100	648.186.200
1000	400	640.184.011	640.184.111	640.184.211	632.184	640.184.000	640.184.100	640.184.200
1000	500	640.185.011	640.185.111	640.185.211	632.185	640.185.000	640.185.100	640.185.200
1000	600	640.186.011	640.186.111	640.186.211	632.186	640.186.000	640.186.100	640.186.200
1200	400	642.184.011	642.184.111	642.184.211	632.184	642.184.000	642.184.100	642.184.200
1200	500	642.185.011	642.185.111	642.185.211	632.185	642.185.000	642.185.100	642.185.200
1200	600	642.186.011	642.186.111	642.186.211	632.186	642.186.000	642.186.100	642.186.200

Height 1800 mm		GLAZED DOOR, MOUNTING PLATE			Side Panel (2 Pcs))	GLAZED DOOR, without MOUNTING PLATE		
Width (mm)	Depth (mm)	Without Plinth	H100 with Plinth	H200 with Plinth		Without Plinth	H100 with Plinth	H200 with Plinth
600	400	676.184.011	676.184.111	676.184.211	632.184	676.184.000	676.184.100	676.184.200
600	500	676.185.011	676.185.111	676.185.211	632.185	676.185.000	676.185.100	676.185.200
600	600	676.186.011	676.186.111	676.186.211	632.186	676.186.000	676.186.100	676.186.200
800	400	678.184.011	678.184.111	678.184.211	632.184	678.184.000	678.184.100	678.184.200
800	500	678.185.011	678.185.111	678.185.211	632.185	678.185.000	678.185.100	678.185.200
800	600	678.186.011	678.186.111	678.186.211	632.186	678.186.000	678.186.100	678.186.200

ATTENTION : Mounting plate's thickness is standard 2mm for 400W-800W, but; for 1000W-1200W chosen 3,00mm thickness.
ATTENTION : Mounting Plate, Side Panel, Plinth are optional as per selection table.
REQUIRED : For panel assembly, a baying kit is required for each baying point. Baying Kit **Product Code: 611.000**
ATTENTION : If the carrier Eyebolt is required for each column in single column panels and for each combined system in combined systems. Eyebolt(pcs) **Product Code : 612.000**
SUPPLY INCLUDES : Main Body Group, Frame Depth Parts, Top Cover, Gland Plate System.

SIZES and MODELS (ASSEMBLED)

Height 2000 mm		SOLID DOOR, MOUNTING PLATE			Side Panel (2 Pcs))	GLAZED DOOR, without MOUNTING PLATE		
Width (mm)	Depth (mm)	Without Plinth	H100 with Plinth	H200 with Plinth		Without Plinth	H100 with Plinth	H200 with Plinth
400	500	644.205.011	644.205.111	644.205.211	632.205	644.205.000	644.205.100	644.205.200
400	600	644.206.011	644.206.111	644.206.011	632.206	644.206.000	644.206.100	644.206.200
400	800	644.208.011	644.208.111	644.208.211	632.208	644.208.000	644.208.100	644.208.200
600	400	646.204.011	646.204.111	646.204.211	632.204	646.204.000	646.204.100	646.204.200
600	500	646.205.011	646.205.111	646.205.211	632.205	646.205.000	646.205.100	646.205.200
600	600	646.206.011	646.206.111	646.206.211	632.206	646.206.000	646.206.100	646.206.200
600	800	646.208.011	646.208.111	646.208.211	632.208	646.208.000	646.208.100	646.208.200
700	400	647.204.011	647.204.111	647.204.211	632.204	647.204.000	647.204.100	647.204.200
700	500	647.205.011	647.205.111	647.205.211	632.205	647.205.000	647.205.100	647.205.200
700	600	647.206.011	647.206.111	647.206.211	632.206	647.206.000	647.206.100	647.206.200
700	800	647.208.011	647.208.111	647.208.211	632.208	647.208.000	647.208.100	647.208.200
800	400	648.204.011	648.204.111	648.204.211	632.204	648.204.000	648.204.100	648.204.200
800	500	648.205.011	648.205.111	648.205.211	632.205	648.205.000	648.205.100	648.205.200
800	600	648.206.011	648.206.111	648.206.211	632.206	648.206.000	648.206.100	648.206.200
800	800	648.208.011	648.208.111	648.208.211	632.208	648.208.000	648.208.100	648.208.200
1000	400	640.204.011	640.204.111	640.204.211	632.204	640.204.000	640.204.100	640.204.200
1000	500	640.205.011	640.205.111	640.205.211	632.205	640.205.000	640.205.100	640.205.200
1000	600	640.206.011	640.206.111	640.206.211	632.206	640.206.000	640.206.100	640.206.200
1000	800	640.208.011	640.208.111	640.208.211	632.208	640.208.000	640.208.100	640.208.200
1200	400	642.204.011	642.204.111	642.204.211	632.204	642.204.000	642.204.100	642.204.200
1200	500	642.205.011	642.205.111	642.205.211	632.205	642.205.000	642.205.100	642.205.200
1200	600	642.206.011	642.206.111	642.206.211	632.206	642.206.000	642.206.100	642.206.200
1200	800	642.208.011	642.208.111	642.208.211	632.208	642.208.000	642.208.100	642.208.200

Height 2000 mm		GLAZED DOOR, MOUNTING PLATE			Side Panel (2 Pcs))	GLAZED DOOR, without MOUNTING PLATE		
Width (mm)	Depth (mm)	Without Plinth	H100 with Plinth	H200 with Plinth		Without Plinth	H100 with Plinth	H200 with Plinth
600	400	676.204.011	676.204.111	676.204.211	632.204	676.204.000	676.204.100	676.204.200
600	500	676.205.011	676.205.111	676.205.211	632.205	676.205.000	676.205.100	676.205.200
600	600	676.206.011	676.206.111	676.206.211	632.206	676.206.000	676.206.100	676.206.200
600	800	676.208.011	676.208.111	676.208.211	632.208	676.208.000	676.208.100	676.208.200
700	400	677.204.011	677.204.111	677.204.211	632.204	677.204.000	677.204.100	677.204.200
700	500	677.205.011	677.205.111	677.205.211	632.205	677.205.000	677.205.100	677.205.200
700	600	677.206.011	677.206111	677.206.211	632.206	677.206.000	677.206.100	677.206.200
700	800	677.208.011	677.208.111	677.208.211	632.208	677.208.000	677.208.100	677.208.200
800	400	678.204.011	678.204.111	678.204.211	632.204	678.204.000	678.204.100	678.204.200
800	500	678.205.011	678.205.111	678.205.211	632.205	678.205.000	678.205.100	678.205.200
800	600	678.206.011	678.206.111	678.206.211	632.206	678.206.000	678.206.100	678.206.200
800	800	678.208.011	678.208.111	678.208.211	632.208	678.208.000	678.208.100	678.208.200

ATTENTION : Mounting plate's thickness is standard 2mm for 400W-800W, but; for 1000W-1200W chosen 3,00mm thickness.
ATTENTION : Mounting Plate, Side Panel, Plinth are optional as per selection table.
REQUIRED : For panel assembly, a baying kit is required for each baying point. Baying Kit **Product Code: 611.000**
ATTENTION : If the carrier Eyebolt is required for each column in single column panels and for each combined system in combined systems. Eyebolt(pcs) **Product Code : 612.000**
SUPPLY INCLUDES : Main Bady Group, Frame Depth Parts, Top Cover, Gland Plate System.

NEO MONOBLOCK SERIES

IP65 NEMA 4 C3 CLASS c UL us IEC DEKRA

FLOORSTANDING CABINET

FRAME STRUCTURE

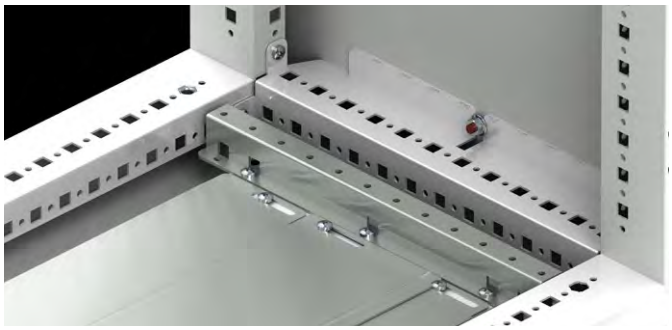

- Fully welded frame made from 1.5 mm material
- Semi-closed height and width profiles
- Fully closed and fixed sides

EARTING CONTINUITY

- On the inner surface of the front door, the grounding screws
- On the top and bottom are increasing the conductive surface to provide grounding continuity.

IP PROTECTION AND NEMA CATEGORIES

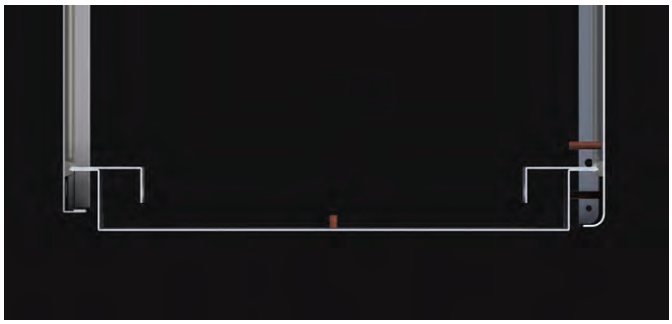

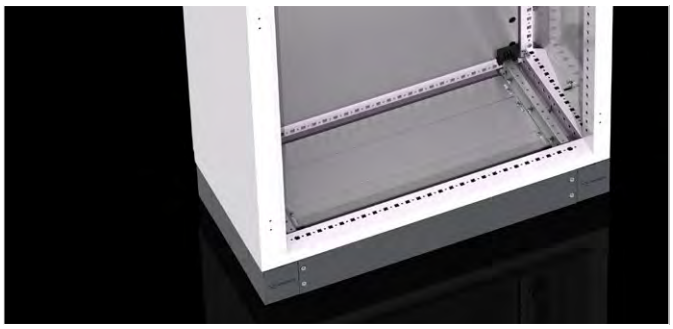

- For single doors; according to EN 60 529 resistance to water and dust in IP65 and NEMA 4 standards.
- For double doors; according to EN 60 529 resistance to water and dust in IP54 and NEMA12
- Foam gaskets are used on all doors; such as front door, rear door, which are close the enclosure. Thanks to this gasket applied; without any application, full insulation is provided between -40 and +100°C

Material	:	Enclosure body, gland plate: 1,50mm Galvanized steel + RAL 7035 Powder Coating Front door : 1,50mm sheet steel + RAL 7035 Powder coating Rear Panel : 1,20mm sheet steel + RAL 7035 Powder Coating
IP Rate	:	IEC EN 60529 Single Door IP65
Supply Includes	:	Enclosure body, front door, locks, hinges, gland plates, rear panel.
Optional	:	Without Mounting Plate (see page 139), Plinth parts (see page 154)
NOTE	:	Selected Plinth parts and Mounting plate can be mounted during the assembling.

ACCESSORIES:

Eyebolt pg: 161

Fixing Wall Rail Pg: 161

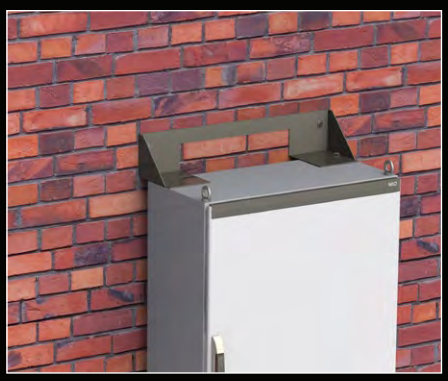

Other Accessories pg: 154

SIZES and MODELS (ASSEMBLED)

	ENCLOSURE		SOLID DOOR, MOUNTING PLATE			SOLID DOOR, without MOUNTING PLATE		
	Width (mm)	Depth (mm)	Without Plinth	H100 Plinth	H200 Plinth	Without Plinth	H100 Plinth	H200 Plinth
Height 1200 mm	600	400	656.124.011	656.124.111	656.124.211	656.124.000	656.124.100	656.124.200
	800	400	658.124.011	658.124.111	658.124.211	658.124.000	658.124.100	658.124.200
Height 1600 mm	600	400	656.164.011	656.164.111	656.164.211	656.164.000	656.164.100	656.164.200
	800	400	658.164.011	658.164.111	658.164.211	658.164.000	658.164.100	658.164.200
	800	500	658.165.011	658.165.111	658.165.211	658.165.000	658.165.100	658.165.200
Height 1800 mm	600	400	656.184.011	656.184.111	656.184.211	656.184.000	656.184.100	656.184.200
	800	400	658.184.011	658.184.111	658.184.211	658.184.000	658.184.100	658.184.200
	800	500	658.185.011	658.185.111	658.185.211	658.185.000	658.185.100	658.185.200
Height 2000 mm	600	400	656.204.011	656.204.111	656.204.211	656.204.000	656.204.100	656.204.200
	800	400	658.204.011	658.204.111	658.204.211	658.204.000	658.204.100	658.204.200
	800	500	658.205.011	658.205.111	658.205.211	658.205.000	658.205.100	658.205.200
	800	600	658.206.011	658.206.111	658.206.211	658.206.000	658.206.100	658.206.200

	ENCLOSURE		GLAZED DOOR, MOUNTING PLATE			GLAZED DOOR, without MOUNTING PLATE		
	Width (mm)	Depth (mm)	Without Plinth	H100 Plinth	H200 Plinth	Without Plinth	H100 Plinth	H200 Plinth
Height 1800 mm	600	400	666.184.011	666.184.111	666.184.211	666.184.000	666.184.100	666.184.200
	800	400	668.184.011	668.184.111	668.184.211	668.184.000	668.184.100	668.184.200
	800	500	668.185.011	668.185.111	668.185.211	668.185.000	668.185.100	668.185.200
Height 2000 mm	600	400	666.204.011	666.204.111	666.204.211	666.204.000	666.204.100	666.204.200
	800	400	668.204.011	668.204.111	668.204.211	668.204.000	668.204.100	668.204.200
	800	500	668.205.011	668.205.111	668.205.211	668.205.000	668.205.100	668.205.200
	800	600	668.206.011	668.206.111	668.206.211	668.206.000	668.206.100	668.206.200

ATTENTION : Mounting plate thicness for single door enclosures is 2,00 mm.

SIZES and MODELS (ASSEMBLED)

Material	:	Enclosure body, gland plate: 1,50mm Galvanized steel + RAL 7035 Powder Coating Front door : 1,50mm sheet steel + RAL 7035 Powder coating Rear Panel : 1,20mm sheet steel + RAL 7035 Powder Coating
IP Rate	:	IEC EN 60529 Double Door IP54
Supply Includes	:	Enclosure body, front door, locks, hinges, gland plates, rear panel.
Optional	:	Without Mounting Plate (see page 141), Plinth parts (see page 154)
NOTE	:	Selected Plinth parts and Mounting plate can be mounted during the assembling.

SIZES and MODELS (ASSEMBLED)

Height 2000 mm		SOLID DOOR, MOUNTING PLATE			SOLID DOOR, without MOUNTING PLATE		
Width (mm)	Depth (mm)	Without Plinth	H100 Plinth	H200 Plinth	Without Plinth	H100 Plinth	H200 Plinth
1000	400	650.204.011	650.204.111	650.204.211	650.204.000	650.204.100	650.204.200
1000	500	650.205.011	650.205.111	650.205.211	650.205.000	650.205.100	650.205.200
1200	400	652.204.011	652.204.111	652.204.211	652.204.000	652.204.100	652.204.200
1200	500	652.205.011	652.205.111	652.205.211	652.205.000	652.205.100	652.205.200
1200	600	652.206.011	652.206.111	652.206.211	652.206.000	652.206.100	652.206.200

ATTENTION : Mounting plate thicness for double door enclosures is 3,00 mm.

SUPERIOR PROTECTION AGAINST ENVIRONMENTAL CONDITIONS

Neo HC Outdoor Cabinets provide superior protection against dust, rain, snow and any other environmental conditions.

IT and TELECOM

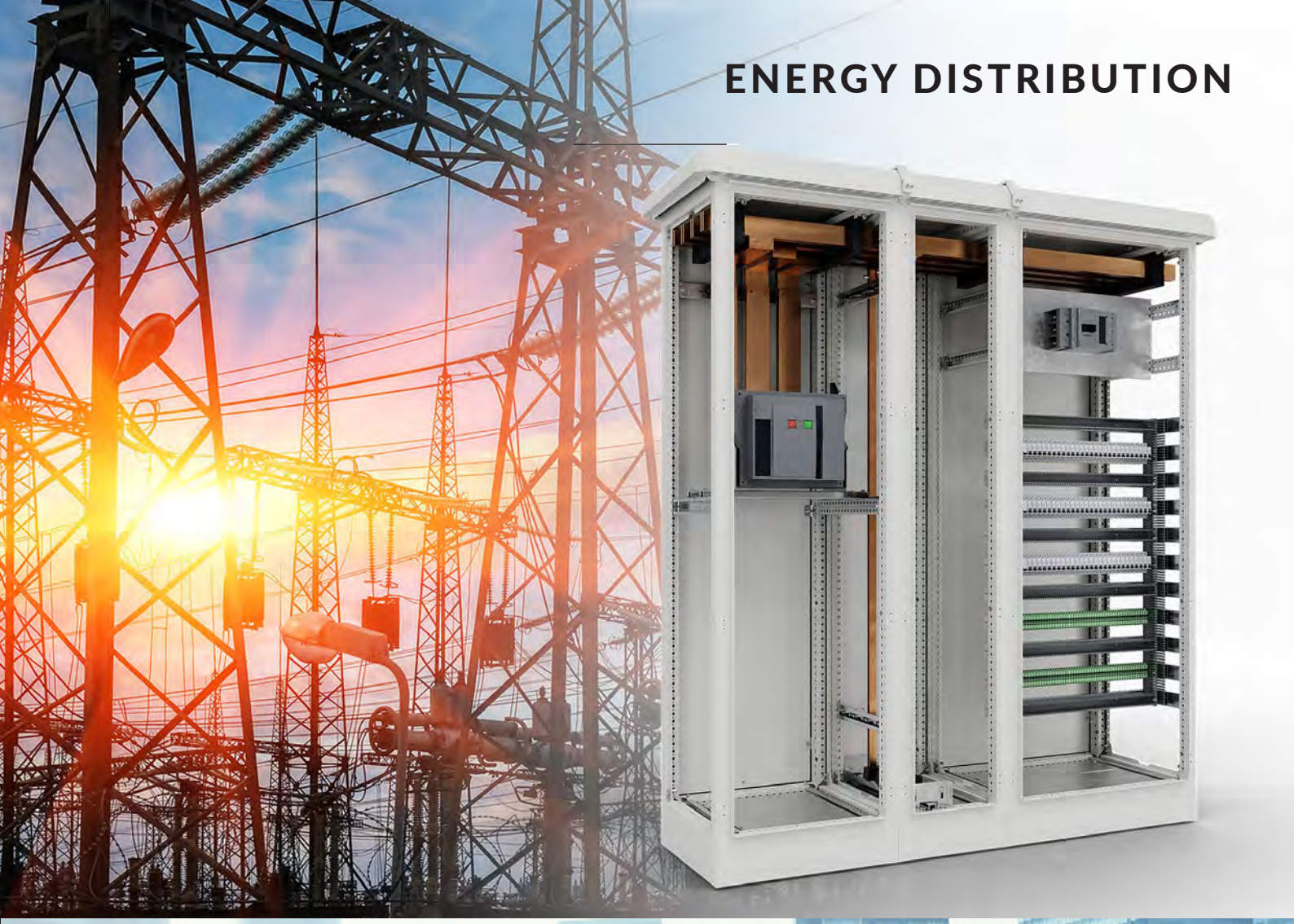
ENERGY DISTRIBUTION

AUTOMATION

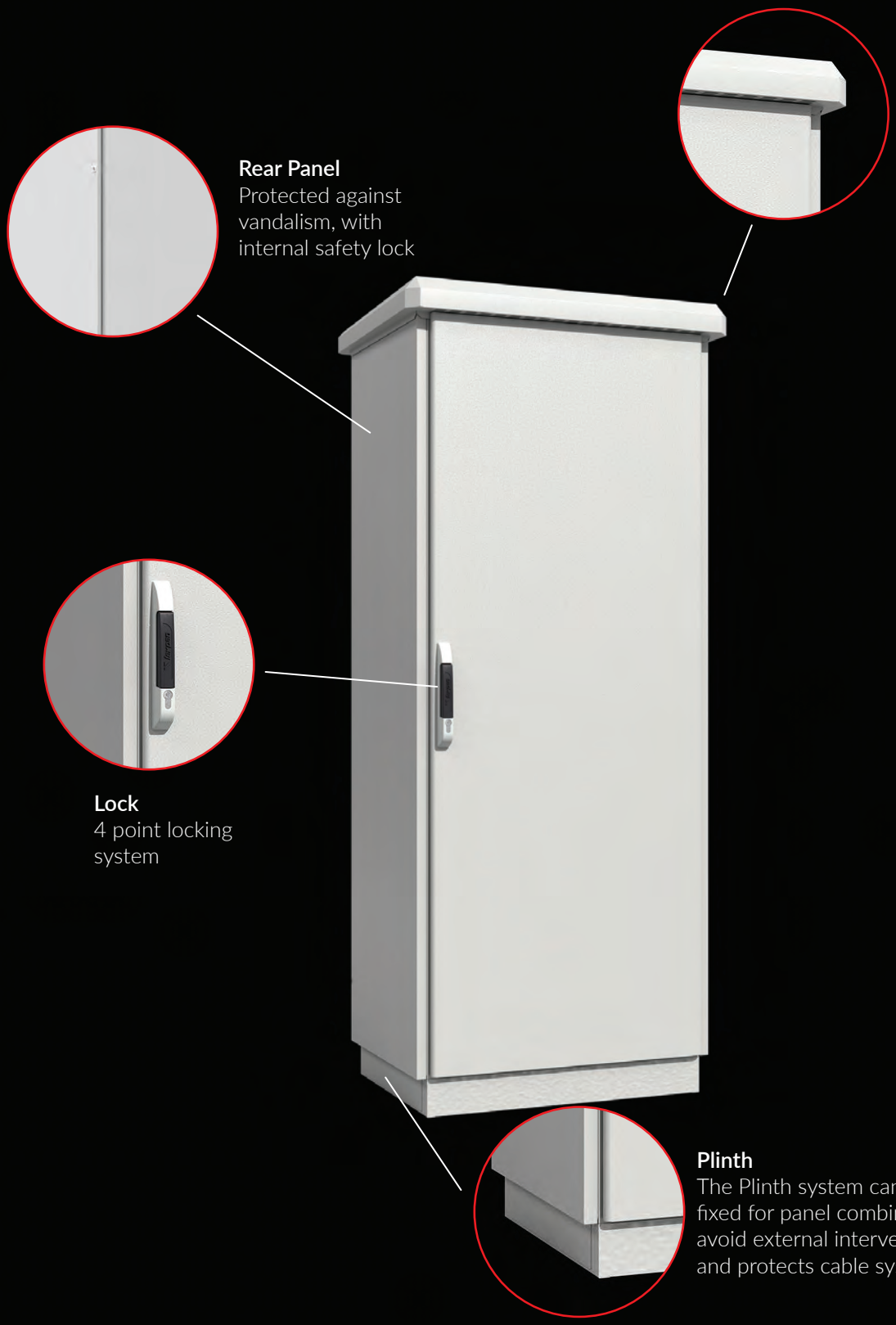

Roof
IP55 protection, extendable, curved system designed against rain and wind resistance

Rear Panel
Protected against vandalism, with internal safety lock

Lock
4 point locking system

Plinth
The Plinth system can be fixed for panel combinations, avoid external intervention and protects cable systems

Air Conditioner Systems

Modularized System

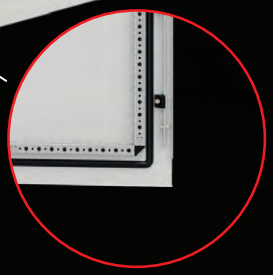

Gasket
Sealing foam Gasket which enables complete isolation between -40°C and +100°C

Hinge
4-point hinge system with 140 degree opening

Material	:	Main Body: 1,5mm Galvanized, Front Door: 1,5mm Mild Steel, Top / Rear Panel: 1-1,2mm Mild Steel, Side Panel: 1,5mm Galvanized, Roof: 1,5mm Galvanized + RAL 7035
Surface Process	:	Iron-Phosphate + Electrostatic Powder Coating
IP Rate	:	IEC and EN 60529 Single Door - Double Door IP 55
NEMA Rate	:	Nema 3R
Corrosion Rate	:	EN ISO 12944-2 C3
Standards	:	IEC 62208 (Enclosure Standards)
Warranty	:	KYT-72
Supply Includes	:	Main Body, Front Door; Key Lock and 140 Openable Hinged, Rear Panel; Screwed and Secure, Top Cover, Bottom Cover

ACCESSORIES:

Roof pg: 149

Baying Kit Pg: 160

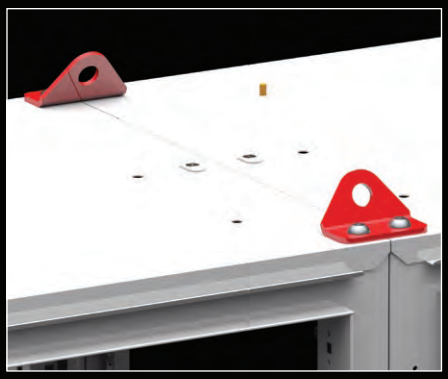

Other Accessories pg: 154

SINGLE MODULE ROOF

LEFT-MIDDLE-RIGHT MODULE ROOF

CLOSED SIDE PANEL

2 FILTER CUT OUT SIDE PANEL

4 FILTER CUT OUT SIDE PANEL

ENCLOSURE PRODUCT CODE	ENCLOSURE DIMENSIONS			SIDE PANELS PRODUCT CODE			ROOF PRODUCT CODE					
	Width (mm)	Height (mm)	Depth (mm)	Closed	2 Filter Cut Out	4 Filter Cut Out	Single Module	Left Module	Right Module	Middle Module	Door	Lock
666.124.000	600	1200	400	633.124	634.124	635.124	934.264	934.364	934.464	934.564	1	1
666.126.000	600	1200	600	633.126	634.126	635.126	934.266	934.366	934.466	934.566	1	1
668.124.000	800	1200	400	633.124	634.124	635.124	934.284	934.384	934.484	934.584	1	1
668.126.000	800	1200	600	633.126	634.126	635.126	934.286	934.386	934.486	934.586	1	1
666.164.000	600	1600	400	633.164	634.164	635.164	934.264	934.364	934.464	934.564	1	1
666.166.000	600	1600	600	633.166	634.166	635.166	934.266	934.366	934.466	934.566	1	1
668.164.000	800	1600	400	633.164	634.164	635.164	934.284	934.384	934.484	934.584	1	1
668.166.000	800	1600	600	633.168	634.168	635.168	934.286	934.386	934.486	934.586	1	1
664.206.000	400	2000	600	633.206	634.206	635.206	934.246	934.346	934.446	934.546	1	1
664.208.000	400	2000	800	633.208	634.208	635.208	934.248	934.348	934.448	934.548	1	1
666.206.000	600	2000	600	633.206	634.206	635.206	934.266	934.366	934.466	934.566	1	1
666.208.000	600	2000	800	633.208	634.208	635.208	934.268	934.368	934.468	934.568	1	1
667.206.000	700	2000	600	633.206	634.206	635.206	934.276	934.376	934.476	934.576	1	1
667.208.000	700	2000	800	633.208	634.208	635.208	934.278	934.378	934.478	934.578	1	1
668.260.000	800	2000	600	633.206	634.206	635.206	934.286	934.386	934.486	934.586	1	1
668.280.000	800	2000	800	633.208	634.208	635.208	934.288	934.388	934.488	934.588	1	1
660.206.000	1000	2000	600	633.206	634.206	635.206	934.216	934.316	934.416	934.516	2	2*
660.208.000	1000	2000	800	633.208	634.208	635.208	934.218	934.318	934.418	934.518	2	2*
662.206.000	1200	2000	600	633.206	634.206	635.206	934.226	934.326	934.426	934.526	2	2*
662.208.000	1200	2000	800	633.208	634.208	635.208	934.228	934.328	934.428	934.528	2	2*

* Interial Lock Sytems

NOTE The side panel codes include a pair of panels.

Technical Drawings Page. 279-282

REQUIRED Filter size is 250x250mm on side panels with filter cut outs.
Filter and Fan Filter Page 46

Baying Kit for panel assembly P. 160

NEO HC OUTDOOR MONOBLOCK SERIES

Roof
IP55 protection, extendable, curved system designed against rain and wind resistance

Lock
4 Points
Lock systems

Rear Panel
Protected against vandalism, with internal safety lock

Plinth
Plinth design which is closed to tamper and protects the cable systems

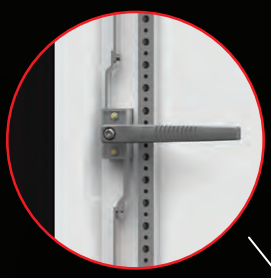

Interial Lock Sytems
2 point locking system

Gasket
Sealing foam gasket which enables complete isolation between -40^{0}C and +100^{0}C

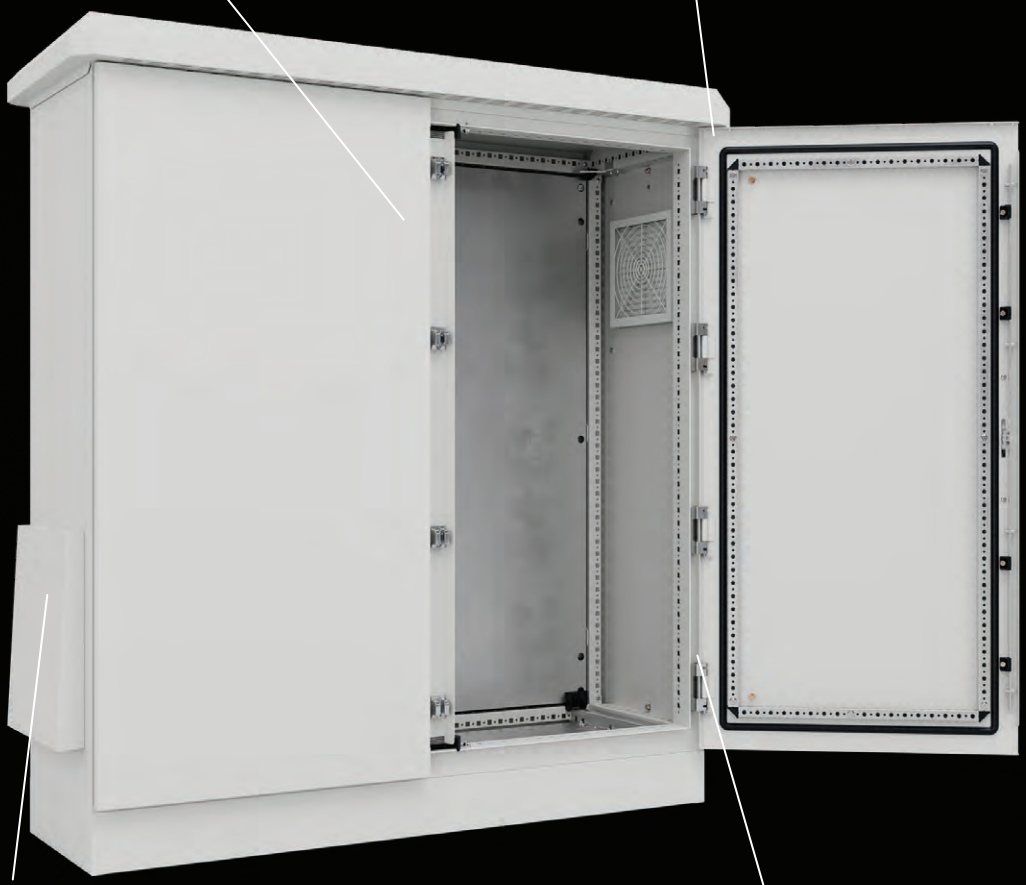

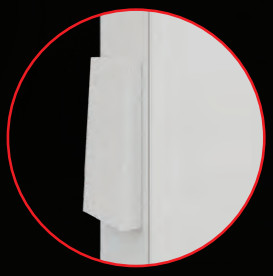

Rain Canopy
Fan-Filter Canopy

Hinge
4-point hinge system with 140 degree opening

NEO HC OUTDOOR MONOBLOCK SERIES

Material	:	Main Body: 1.5mm Galvanized Steel, Roof: 1.5mm Galvaized Steel, Front Door: 1.5mm Mild Steel, Rear Panel: 1-1.2mm Mild Steel,
Surface Process	:	Iron-phosphate + electrostatic powder coating RAL 7035
IP Rate	:	IEC EN 60529 Single Door IP65, Double Door IP55
NEMA Rate	:	Nema 3R
Corrosion Rate	:	EN ISO 12944-2 C3
Standards	:	IEC 62208 (Enclosure Standards)
Warranty	:	KYT-72
Supply Includes	:	Monoblock Body, Front Door; Key Lock and 140 Openable Hinged, Rear Panel; Screwed and Secure, Roof, Gland Plate system

ACCESSORIES:

Plinth pg: 157

Other Accessories pg: 154

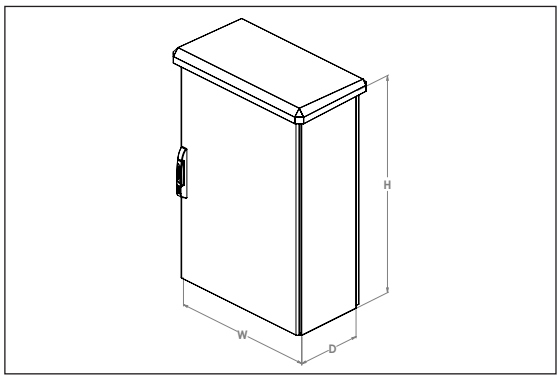

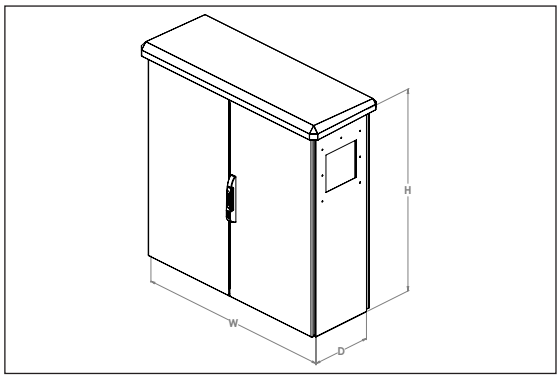

	PRODUCT CODE	Enclosure Dimension W x H x D (mm)			Door	Lock
		Width (mm)	Height (mm)	Depth (mm)		
Closed	**676.124.000**	600	1200	400	1	1
	676.126.000	600	1200	600	1	1
	678.124.000	800	1200	400	1	1
	678.126.000	800	1200	600	1	1
	672.124.000	1200	1200	400	2	2*
	672.126.000	1200	1200	600	2	2*
	686.204.000	600	2000	400	1	1
	686.206.000	600	2000	600	1	1
	688.204.000	800	2000	400	1	1
	688.206.000	800	2000	600	1	1
	682.206.000	1200	2000	600	2	2*
Filter Cut Out	**686.124.000**	600	1200	400	1	1
	686.126.000	600	1200	600	1	1
	688.124.000	800	1200	400	1	1
	688.126.000	800	1200	600	1	1
	682.124.000	1200	1200	400	2	2*
	682.126.000	1200	1200	600	2	2*
	696.204.000	600	2000	400	1	1
	696.206.000	600	2000	600	1	1
	698.204.000	800	2000	400	1	1
	698.206.000	800	2000	600	1	1
	692.206.000	1200	2000	600	2	2*

* Interial Lock Systems

NOTE Filter Cut Out 250x250 mm

NOTE Technical Drawings P. 275-278

REQUIRED Filter / Fan P. 236-237

PLINTH CORNER PART

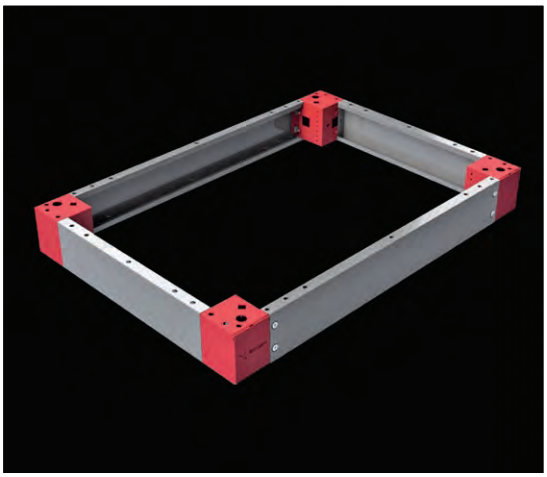

Relevance : TEOS, NEO Modular, NEO Monoblock, NEO HC Modular, NEO HC Monoblock

Related size : PLINTH HEIGHT

Material : Corner part : 2,00 mm galvanized steel + RAL 7012 powder-coating
Plastic Panel : RAL 7012 ABS Plastic

Supply Includes : 4 pcs 100 mm or 200 mm high plinth corner part, 4 pcs plastic panel and mounting parts

NOTE : Please see page 154-155 for plinth accessories.

PRODUCT CODE	TEOS PLINTH HEIGHT (mm)
708.100	100
708.200	200

PLINTH FRONT COVERS

Relevance : TEOS, NEO Modular, NEO Monoblock NEO HC Modular, NEO HC Monoblock

Related size : ENCLOSURE WIDHT

Material : 100 mm front plinth part:
1,50 mm galvanized steel + RAL 7012 powder-coating

Supply Includes : 2 pcs 100 mm front plinth part and mounting parts

REQUIRED : 2 sets of front plinth panel group for 200 mm height plinths

PRODUCT CODE	ENCLOSURE WIDHT (mm)
709.140	400
709.160	600
709.170	700
709.180	800
709.100	1000
709.120	1200

PLINTH SIDE COVERS

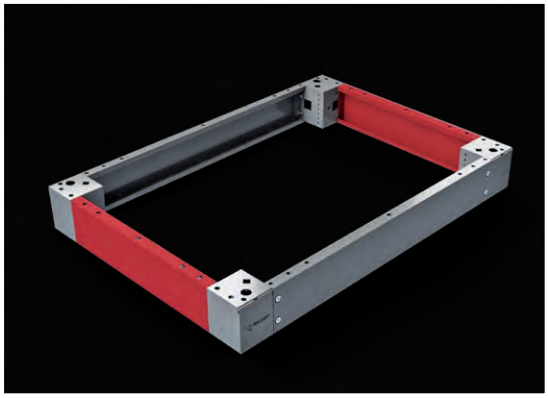

Relevance : TEOS, NEO Modular, NEO Monoblock NEO HC Modular, NEO HC Monoblock

Related size : ENCLOSURE WIDHT

Material : 100 mm side plinth part:
1,50 mm galvanized steel + RAL 7012 powder-coating

Supply Includes : 2 pcs 100 mm front plinth part and mounting parts

REQUIRED : 2 sets of front plinth panel group for 200mm height plinths

PRODUCT CODE	ENCLOSURE WIDHT (mm)
710.140	400
710.150	500
710.160	600
710.180	800
710.100	1000

PLINTH and PLINTH PARTS

FIXED PLINTH

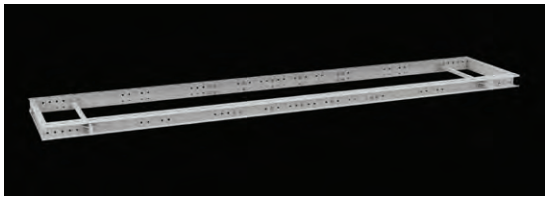

Relevance : TEOS, NEO Modular

Material : 3,00 mm / galvanized steel + RAL 7012 coating

Supply Includes : Plinth width : 2 pcs plinth and combination parts.
Plinth depth : 2 pcs plinth and combination parts.

REQUIRED : It is required M12x30 screw set for fixing (page 259)

- Mounts the enclosures combined side-to-side on a single platform.
- Enclosures are connected to the plinth via M12 perforations placed on the combination corners.
- It gives advantages in the lifting and forklift.
- Enclosures can be mounted directly on the (standard) plinth.
- Please refer to our sales department for the manufacturing schedule.

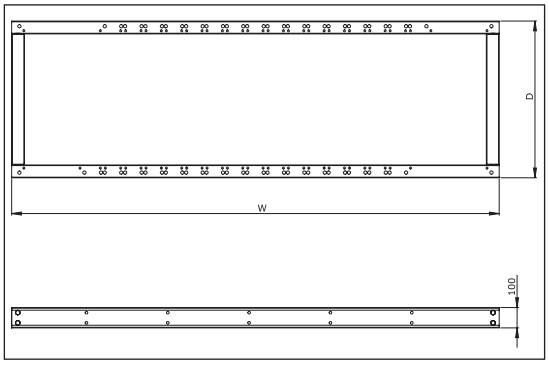

PRODUCT CODE	PLINTH WIDHT (mm)
912.100	1800
912.101	1900
912.102	2000
912.103	2100
912.104	2200
912.105	2300
912.106	2400
912.107	2500
912.108	2600
912.109	2700
912.110	2800

PRODUCT CODE	PLINTH WIDHT (mm)
912.111	2900
912.112	3000
912.113	3100
912.114	3200
912.115	3300
912.116	3400
912.117	3500
912.118	3600
912.119	3700
912.120	3800
912.121	3900

PRODUCT CODE	PLINTH WIDHT (mm)
912.133	400
912.134	500
912.135	600
912.136	800

PRODUCT CODE	PLINTH WIDHT (mm)
912.122	4000
912.123	4100
912.124	4200
912.125	4300
912.126	4400
912.127	4500
912.128	4600
912.129	4700
912.130	4800
912.131	4900
912.132	5000

M12 LEVELING FEET

Relevance : TEOS, NEO Modular, NEO Monoblock

Supply Includes : 4 pcs M12 Leveling Feet

Product code : 995.510

PLINTH and PLINTH PARTS

BLOCK PLINTH

Relevance	TEOS, NEO Modular, NEO Monoblock, NEO HC Modular, NEO HC Monoblock
Related Size	Width X Depth
Material	2mm Galvanized + RAL 7035
Supply Includes	Welded Block PLINTH
	Easy movement apparatus on the ground
	PLINTH mounting bolt equipment
Product Description	The ability of fixing plinths to each other in process of combining enclosures.

PRODUCT CODE		
100 H	200 H	ENCLOSURE DIMENSIONS
915.146	915.246	400 W x 600 D
915.148	915.248	400 W x 800 D
915.164	915.264	600 W x 400 D
915.166	915.266	600 W x 600 D
915.168	915.268	600 W x 800 D
915.176	915.276	700 W x 600 D
915.178	915.278	700 W x 800 D
915.184	915.284	800 W x 400 D
915.186	915.286	800 W x 600 D
915.188	915.288	800 W x 800 D
915.116	915.216	1000 W x 600 D
915.118	915.218	1000 W x 800 D
915.124	915.224	1200 W x 400 D
915.126	915.226	1200 W x 600 D
915.128	915.228	1200 W x 800 D

BLOCK PLINTH SIDE PANEL

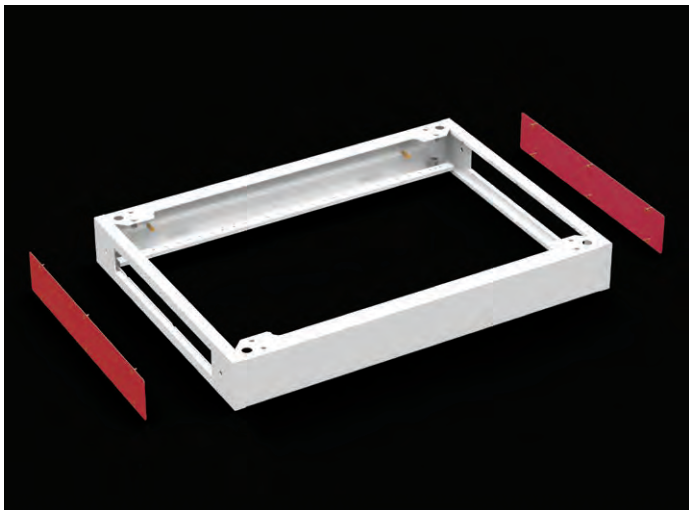

Material 1,5mm Galvanized + RAL 7035

Supply Includes 2 Pcs 100mm / 200mm H PLINTH Side Cover

PLINTH Side Cover Bolt Accessory

PLINTH mounting bolt equipment

PRODUCT CODE		
100 H	200 H	ENCLOSURE DIMENSIONS
916.140	916.140	400 D
916.160	916.160	600 D
916.180	916.180	800 D

BLOK PLINTH GLANT PLATE

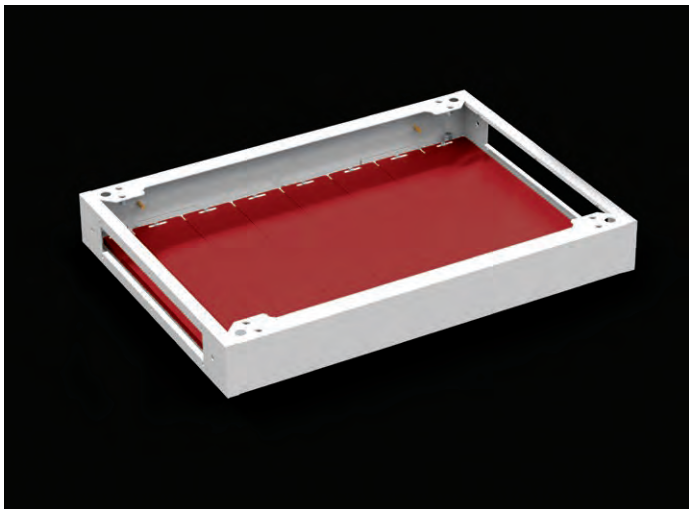

Material 1,5mm Galvanized

Supply Includes 1 Pcs 55mm / 100mm width glant plate

PLINTH Gland Plate Bolt Accessory

PRODUCT CODE		
55 W	100 W	ENCLOSURE DIMENSIONS
721.040	722.040	400 D
721.060	722.060	600 D
721.080	722.080	800 D

PRODUCT DIMENSIONS	55 W (Pcs)	10 0 W (Pcs)
400 W x 600 D - 100 H / 200 H	1	3
400 W x 800 D - 100 H / 200 H	1	3
600 W x 400 D - 100 H / 200 H	1	5
600 W x 600 D - 100 H / 200 H	1	5
600 W x 800 D - 100 H / 200 H	1	5
700 W x 600 D - 100 H / 200 H	1	6
700 W x 800 D - 100 H / 200 H	1	6
800 W x 400 D - 100 H / 200 H	1	7
800 W x 600 D - 100 H / 200 H	1	7
800 W x 800 D - 100 H / 200 H	1	7
1000 W x 600 D - 100 H / 200 H	1	9
1000 W x 800 D - 100 H / 200 H	1	9
1200 W x 400 D - 100 H / 200 H	1	11
1200 W x 600 D - 100 H / 200 H	1	11
1200 W x 800 D - 100 H / 200 H	1	11

FOAM RUBBER CABLE ENTRY SYSTEM

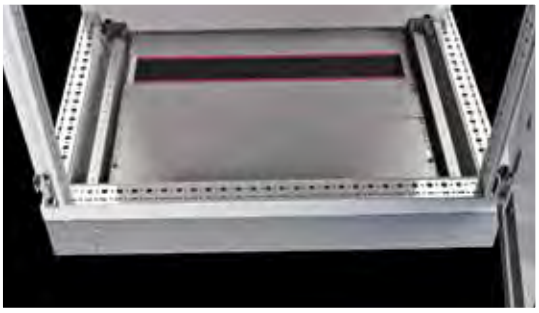

Relevance : TEOS, NEO Modular, NEO HC Modular

Related Size : ENCLOSURE WIDTH
Material : Polyurethane foam
Supply Includes : Polyurethane foam, combination profile and parts

NOTE : 2 accessories per (1000mm and 1200mm wide) foam entry system

PRODUCT CODE	ENCLOSURE WIDHT (mm)
923.400	400
923.600	600
923.700	700
923.800	800
923.100	1000*
923.120	1200*

BRUSHED CABLE ENTRY SYSTEM

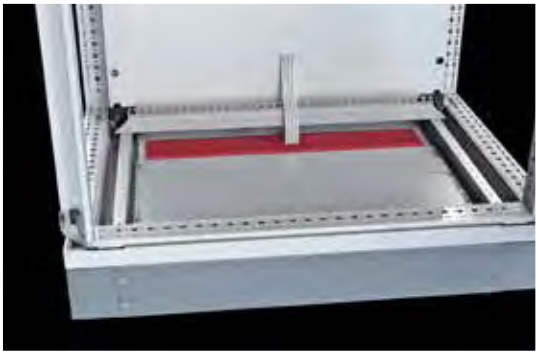

Relevance : TEOS, NEO Modular, NEO HC Modular

Related size : ENCLOSURE WIDTH
Material : ABS plastic
Supply Includes : Strip brush, combination profile and parts

NOTE : 2 accessories per (1000mm and 1200mm wide) brush entry system

PRODUCT CODE	ENCLOSURE WIDHT (mm)
923.401	400
923.601	600
923.701	700
923.801	800
923.101	1000*
923.121	1200*

CABLE CLAMP RAIL (CLIP-ON)

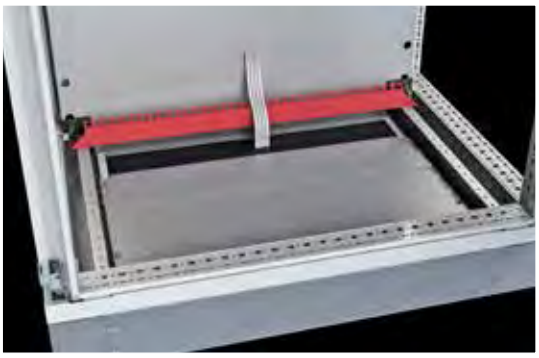

Relevance : TEOS, NEO Modular, NEO Monoblock, NEO HC Modular, NEO HC Monoblock

Related size : ENCLOSURE WIDTH
Material : 2,00 mm mild steel + zinc-plating
Supply Includes : Cable bracket combination profile and combination parts.

PRODUCT CODE	ENCLOSURE WIDHT (mm)
998.400	400
998.600	600
998.700	700
998.800	800
998.100	1000
998.120	1200

ASSEMBLING and LIFTING PARTS

BAYING KIT

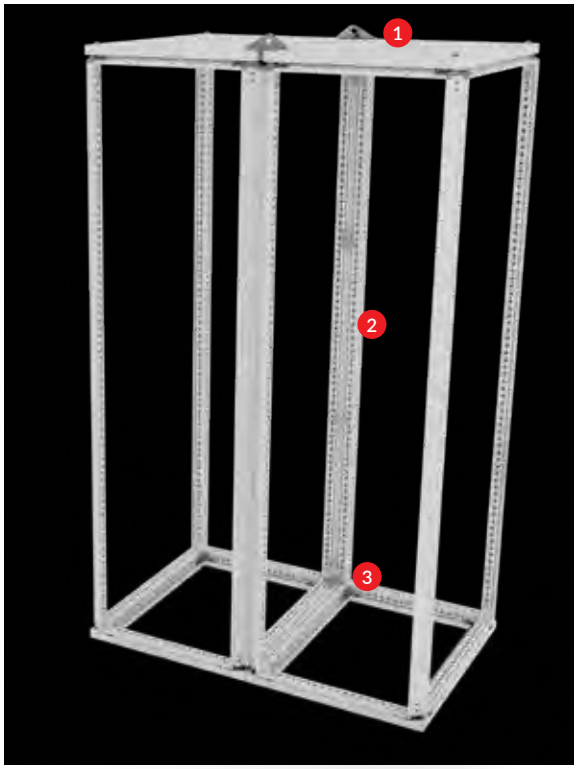

Relevance : TEOS

Material : 3,00 mm - 4,00 mm mild steel parts zinc coated + galvanized

Supply Includes : 2 pcs combination angles, 4 pcs angular brackets, 2 pcs adjustable bracket, 4 pcs fixing bracket 5,60 insulation gasket and mounting parts

Product Code : 711.000

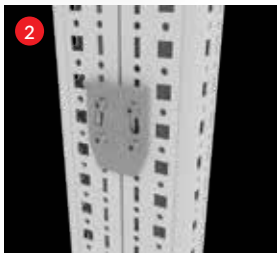

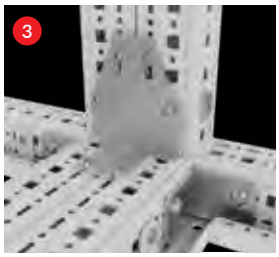

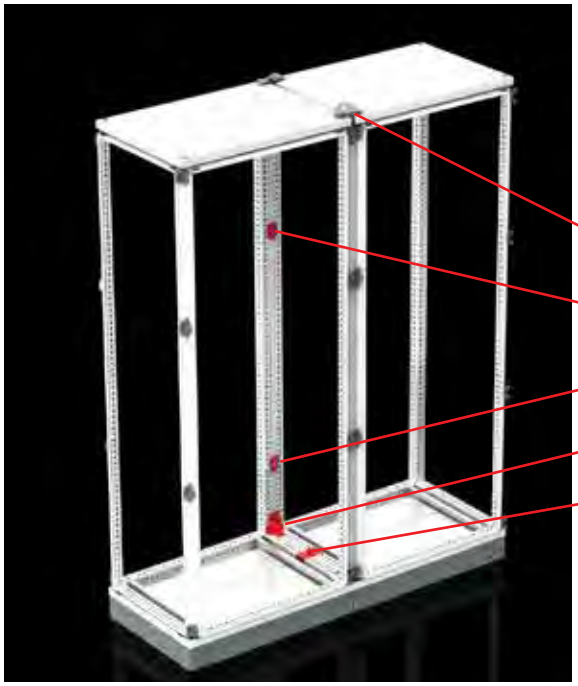

1-) 2x Combination angles. Product Code: **711.001** (2 pcs)

2-) 4x Fixing bracket. Product Code: **711.002** (4 pcs)

3-) 4x angular brackets. Product Code: **711.003** (4 pcs)

4-) 2x adjustable bracket. Product Code: **711.004** (2 pcs)

5-) 5,60 m 10x3 gasket. Product Code: **992.100** (page 205)

BAYING KIT

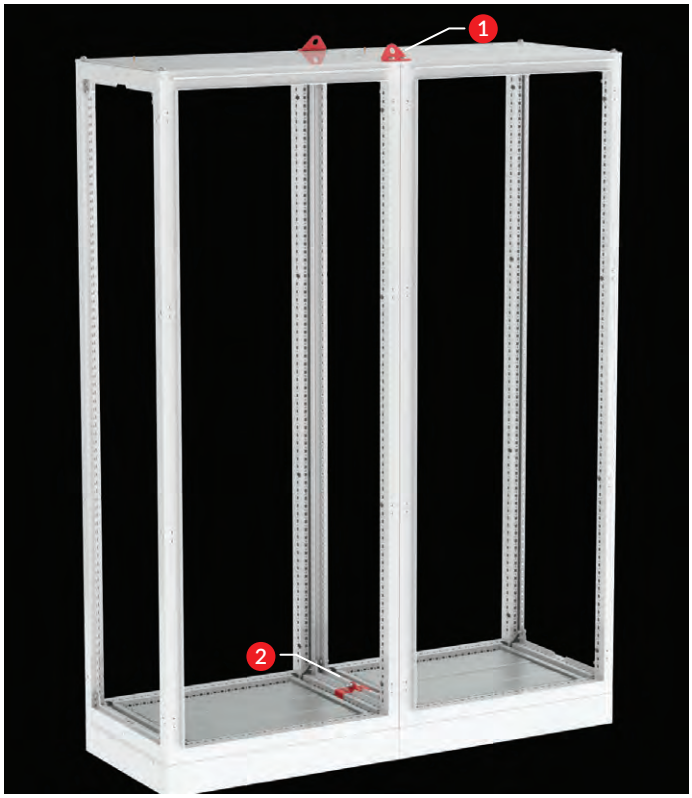

Relevance	**: NEO Modular, NEO HC Modular**
Material	: 3,00 mm - 4,00 mm mild steel parts zinc coated + galvanized
Supply Includes	: 2 pcs combination angles (1) 8 Pcs M6 assembling screw and nuts 4 pcs angular brackets (2) 5.6 m insulation gasket and mounting parts
Product Code	**: 611.000**

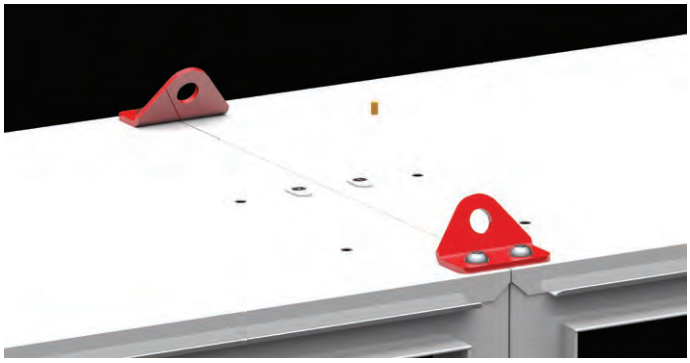

ASSEMBLING and LIFTING PARTS

M12 EYEBOLT CARRIER

Relevance : TEOS, NEO Monoblock, NEO Modular, NEO HC Monoblock, NEO HC Modular

Materials : Carbon Steel + Electro-Galvanized Coating

Supply Includes: 4 x Eyebolts and Enclosure Assembly Parts

Product Code : 612.000

FIXING WALL RAIL

Relevance : NEO Monoblock

Material : 4,00 mm mild steel + RAL 7035 powder coating

Supply Includes : 2 pcs rail and assembling parts

ATTENTION : The wall fixing option is only available for 1200-height panels. It can be used as wall support with base in other height panels.

PRODUCT CODE	ENCLOSURE WIDHT (mm)
972.600	600
972.800	800
972.100	1000
972.120	1200

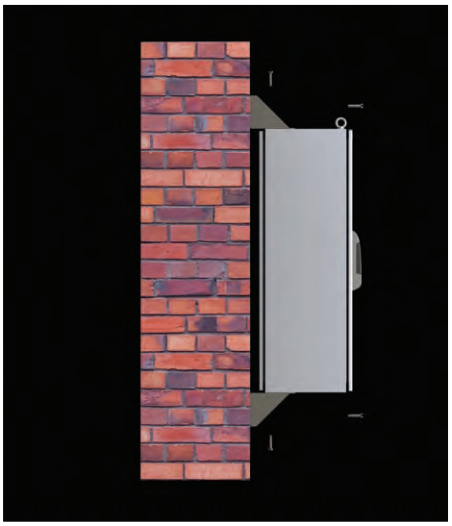

TOP ANGLE IRON COMBINATION

Relevance : TEOS

Material : 60x60 mm x 5 mm + RAL 7012 coating

Supply Includes : 2 length angle bending

Required : 4 pcs M12x30 screw set is required for each enclosure.

- This connection type is particularly used for heavy enclosure combination and support applications. Do the supporting in accordance with supporting instructions.
- Please refer to our sales department for the manufacturing schedule.

PRODUCT CODE	ANGLE BRACKET WIDHT (mm)
912.137	1800
912.138	1900
912.139	2000
912.140	2100
912.141	2200
912.142	2300
912.143	2400
912.144	2500
912.145	2600
912.146	2700
912.147	2800

PRODUCT CODE	ANGLE BRACKET WIDHT (mm)
912.148	2900
912.149	3000
912.150	3100
912.151	3200
912.152	3300
912.153	3400
912.154	3500
912.155	3600
912.156	3700
912.157	3800
912.158	3900

PRODUCT CODE	ANGLE BRACKET WIDHT (mm)
912.159	4000
912.160	4100
912.161	4200
912.162	4300
912.163	4400
912.164	4500
912.165	4600
912.166	4700
912.167	4800
912.168	4900
912.169	5000

CORNER ENCLOSURE

Relevance : TEOS

- Designed for enclosures when enclosures are combined as an L. Door opening has been increased by means of door suspending adapter.
- Use the table below for corner enclosure options. Bottom-top plinth frame and vertical frame group are standard. Only the panel set and adapter group is chosen in accordance with enclosure depth.
- Inner enclosure applications and panel combination parts can be applied as standard.

	PRODUCT CODE	ENCLOSURE DIMENSION	
		Height (mm)	Depth (mm)
ADAPTER PART	933.000	1800	600
	933.001	1800	800
	933.002	2000	600
	933.003	2000	800
PANEL SET (2 PCS)	933.004	1800	600
	933.005	1800	800
	933.006	2000	600
	933.007	2000	800

MOUNTING PLATE (3 mm thickness)

Material:
3,00 mm galvanized steel

Supply Includes :
1 pcs mounting plate and assembling parts

	Height (mm)			
Width (mm)	1200	1800	1600	2000
400	-	707.418	-	707.420
600	707.612	707.616	707.618	707.620
700	-	-	-	707.720
800	707.812	707.816	707.818	707.820
1000	-	-	707.018	707.020
1200	-	-	707.218	707.220

MOUNTING PLATES (2 mm thickness)

Material:
2,00 mm galvanized steel

Supply Includes :
1 pcs mounting plate and assembling parts

	Height (mm)			
Width (mm)	1200	1800	1600	2000
400	-	717.418	-	717.420
600	717.612	717.616	717.618	717.620
700	-	-	-	717.720
800	717.812	717.816	717.818	717.820

MOUNTING RAIL and MOUNTING PLATE

INTERMEDIATE MOUNTING PLATE

Relevance : TEOS, NEO Modular, NEO HC Modular,

Related size : ENCLOSURE WIDTH

Material : 2,00 mm galvanized steel

Supply Includes : 1 pcs mounting plate, 3 pcs bracket and assembling parts.

PRODUCT CODE	ENCLOSURE WIDTH (mm)
712.120	1200
712.160	1600
712.180	1800
712.200	2000
712.220	2200

MOUNTING PLATE FOR CORNER EXTENSION

Relevance : TEOS, NEO Modular, NEO Monoblock,
NEO HC Modular, NEO HC Monoblock,

Material : 2,00 mm galvanized steel

Supply Includes : 2 pcs extension part and assembling parts

PRODUCT CODE	ENCLOSURE HEIGHT (mm)
712.121	1200
712.161	1600
712.181	1800
712.201	2000
712.221	2200

SHORT MOUNTING PLATE APPLICATION

Relevance : TEOS, NEO Modular, NEO Monoblock,
NEO HC Modular, NEO HC Monoblock,

- Depth rails allow for use of shorter mounting plates inside the enclosure. Thereby, this allows for busbar support and busbar applications on the mounting plate.
- Each mounting plate needs 2 pcs depth rails and 4 pcs brackets. Please see page 167-169 for related products.
- Please see page 210-231 for busbar support needs.

ATTENTION : There is no inconvenience in using intermediate mounting plates and corner extension parts for short mounting plate applications. It can move front to back with these accessories

MOUNTING RAIL and MOUNTING PLATE

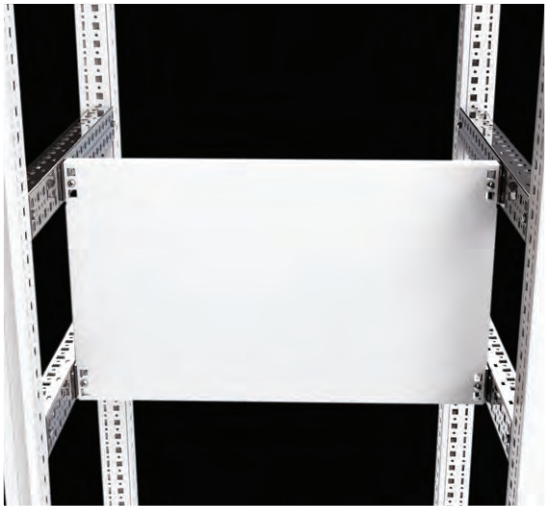

Application on MCCB kit, page 172

Application on enclosure frame

PARTIAL MOUNTING PLATE

Relevance : TEOS, NEO Modular, NEO Monoblock, NEO HC Modular, NEO HC Monoblock,

Material : 2,00 mm galvanized steel.

Supply Includes : 1 pcs. mounting plate

REQUIRED : 4 pcs plug-in rail bracket required for mounting the mounting plate. Page 96
Product Code: 944.420 (100 pcs.) (Screws included)
944.421 (12 pcs.) (Screws included)

PRODUCT CODE	ENCLOSURE WIDTH(mm)	PLATE NET WIDTH(mm)	PLATE NET HEIGHT(mm)	PACKS OF
944.442	400	295	150	1
944.443	400	295	175	1
944.444	400	295	200	1
944.445	400	295	250	1
944.446	400	295	300	1
944.447	400	295	400	1
944.448	400	295	500	1
944.449	400	295	600	1
944.450	500	395	400	1
944.451	600	495	150	1
944.452	600	495	175	1
944.453	600	495	200	1
944.454	600	495	250	1
944.455	600	495	300	1
944.456	600	495	400	1
944.457	600	495	500	1
944.458	600	495	600	1
944.459	700	595	150	1
944.460	700	595	175	1
944.461	700	595	200	1
944.462	700	595	250	1
944.463	700	595	300	1
944.464	700	595	400	1
944.465	700	595	500	1
944.466	700	595	600	1
944.467	800	695	150	1
944.468	800	695	175	1
944.469	800	695	200	1
944.470	800	695	250	1
944.471	800	695	300	1
944.472	800	695	400	1
944.473	800	695	500	1
944.474	800	695	600	1
944.475	1000	895	175	1
944.476	1000	895	200	1
944.477	1000	895	250	1

MOUNTING RAIL and MOUNTING PLATE

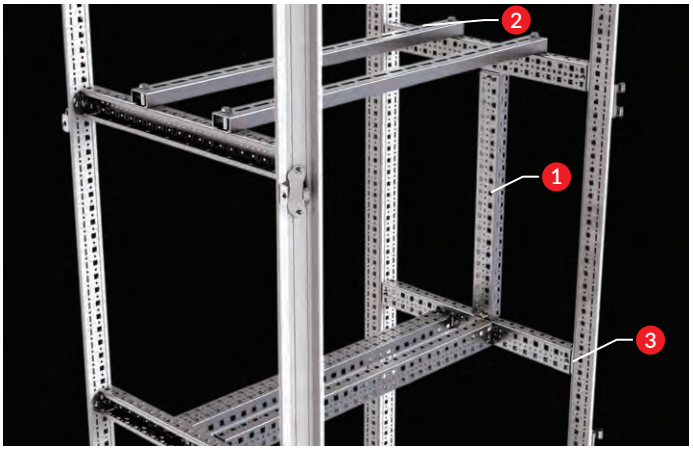

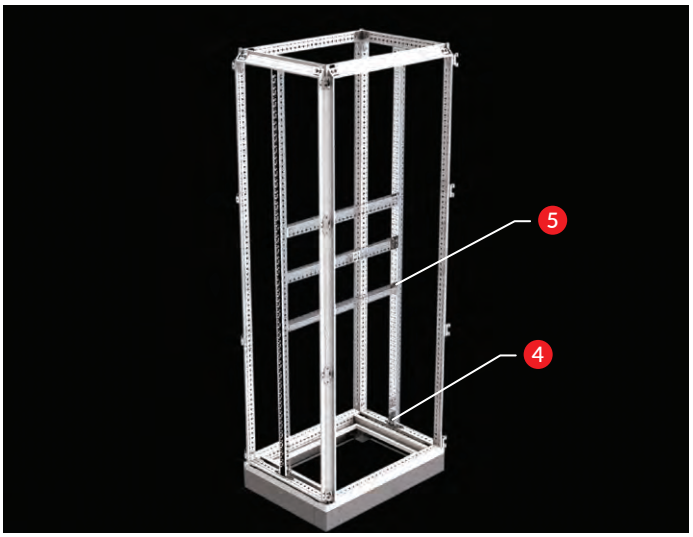

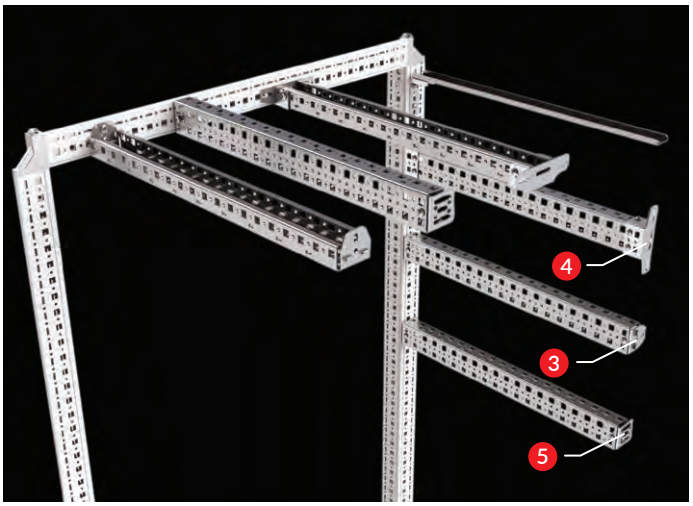

In terms of both width and interior depth size, TEOS body structure is designed at the same coefficient rate. The complete structure inside the body is designed at the 25mm coefficient. Thus, the width rail can also be installed on the depth rail.

1 SCISSILE RAIL (P. 167)

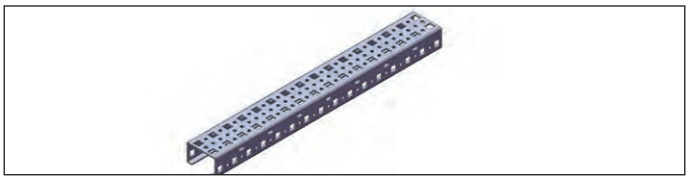

2 HEAVY EQUIPMENT PROFILE (P. 168)

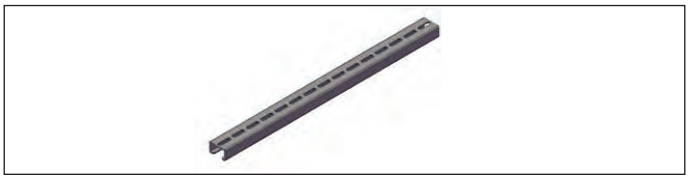

3 PLUG IN RAIL BRACKET (P. 169)

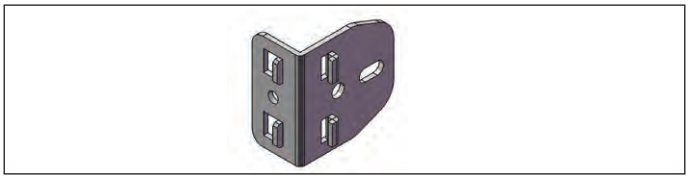

4 ADJUSTABLE RAIL BRACET (P. 170)

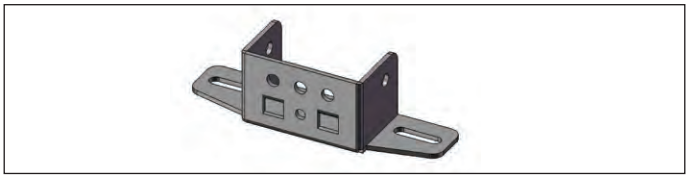

5 ADJUSTABLE RAIL BRACET (P. 171)

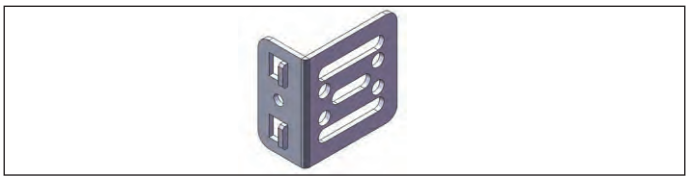

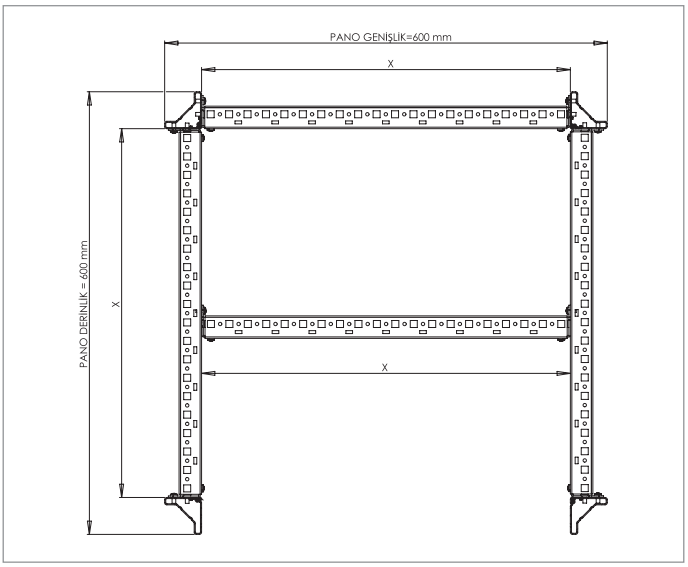

MOUNTING RAIL and MOUNTING PLATE

SCISSILE RAIL SYSTEM (50x25 cross-section)

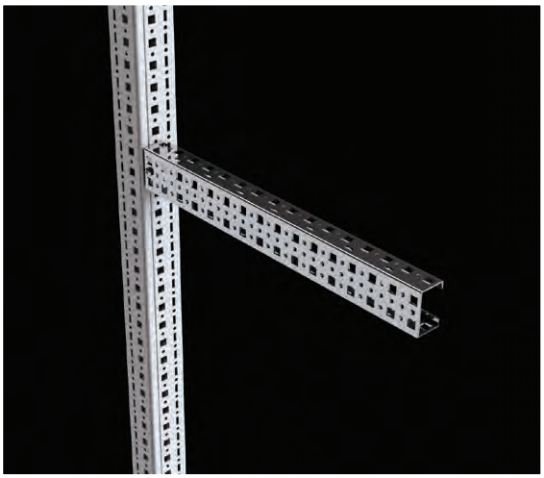

Relevance : TEOS, NEO Modular, NEO Monoblock, NEO HC Modular, NEO HC Monoblock,

Material: 2.00 mm Mild steel + zinc coated

Supply Includes : In product pack there is only rail included. Please be check quantities of rails in pack on sheet below

REQUIRED : There is brackets required to assemble rail. Please see page 169-171

Cut -off point

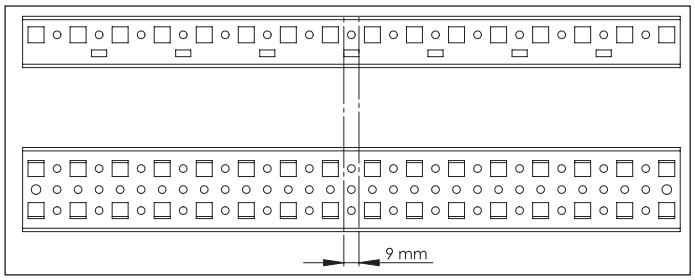

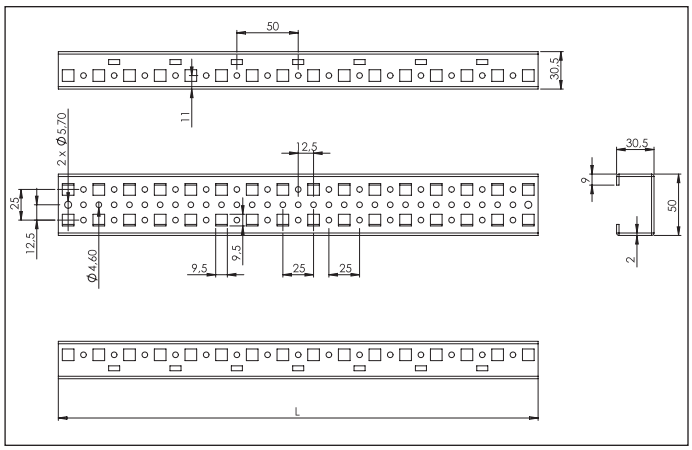

- It is designed for assembling electrical equipments into the enclosure. It is given advantages for assembling in 3D every directions.
- It is produced from 2 mm sheet thickness, thanks to this advantage and with bended structure it gives force.
- There is standard sizes, also the rail can cut to adjust required dimension.
- The rail coated zinc after production. Thanks to this coating all cutted edges protected against corrosion.
- To see using styles of rail, please see page 169-174

PRODUCT CODE		ENCLOSURE DEPTH (mm)	RAIL NET LENGHT (mm)	PACKS OF
944.422	ENCLOSURE WIDTH(mm)	400	291	2
944.423	ENCLOSURE WIDTH(mm)	500	391	2
944.424	ENCLOSURE WIDTH(mm)	600	491	2
944.432	ENCLOSURE WIDTH(mm)	700	591	2
944.425	ENCLOSURE WIDTH(mm)	800	691	2
944.426	ENCLOSURE WIDTH(mm)	1000	891	2
944.427	ENCLOSURE HEIGHT (mm)	1200	1091	2
944.428	ENCLOSURE HEIGHT (mm)	1600	1491	2
944.429	ENCLOSURE HEIGHT (mm)	1800	1691	2
944.430	ENCLOSURE HEIGHT (mm)	2000	1891	4
944.431	ENCLOSURE HEIGHT (mm)	2200	2091	4

MOUNTING RAIL and MOUNTING PLATE

HEAVY EQUIPMENT PROFILE

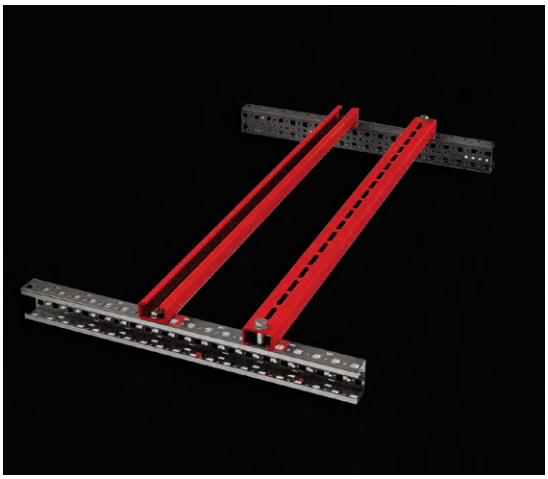

Relevance : TEOS, NEO Modular, NEO Monoblock, NEO HC Modular, NEO HC Monoblock,

Material : 3 mm Mild steel + zinc coated

Supply Includes : 2 pcs rail and assembly screws

- Used for mounting heavy equipments such as base mounting MCCB and transformer.

PRODUCT CODE	ENCLOSURE WIDTH (mm)	RAIL NET LENGHT (mm)	PACKS OF
998.540	400	360	2
998.560	600	560	2
998.570	700	660	2
998.580	800	760	2
998.510	1000	960	2

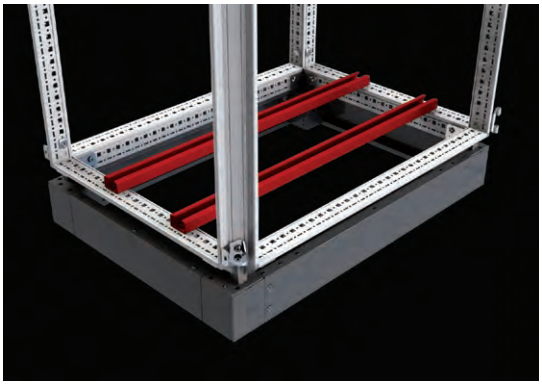

Heavy Equipment application on base

REQUIRED : It is required to fixing on frame, 4 pcs of M6 hide nut. Page 189

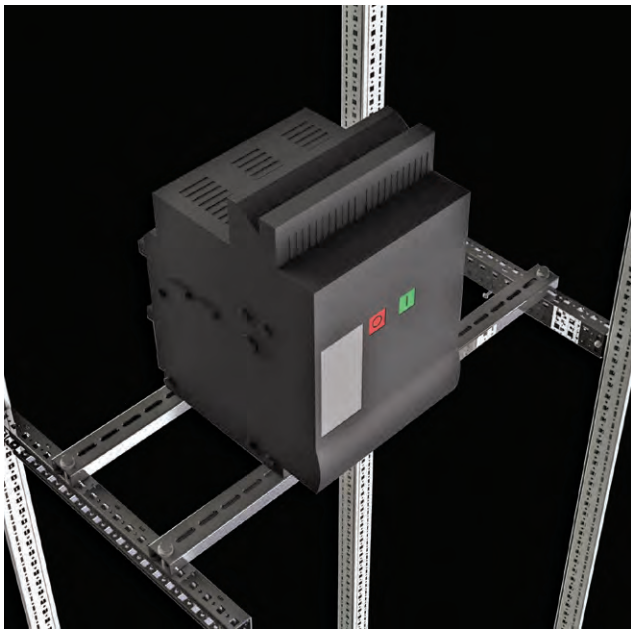

Heavy Equipment application on rails

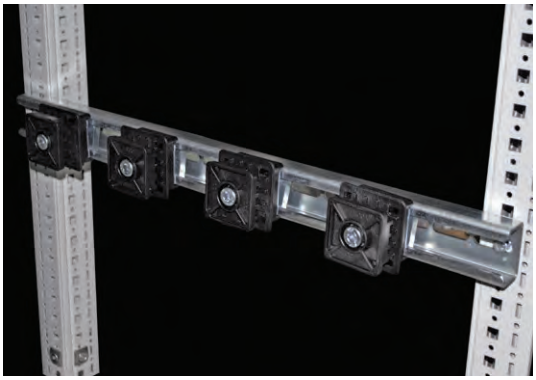

Application with adjustable flat busbar support

REQUIRED : It is required to fixing on frame, 4 pcs of M6 hide nut. Page 189

MOUNTING RAIL and MOUNTING PLATE

PLUG-IN RAIL BRACKET

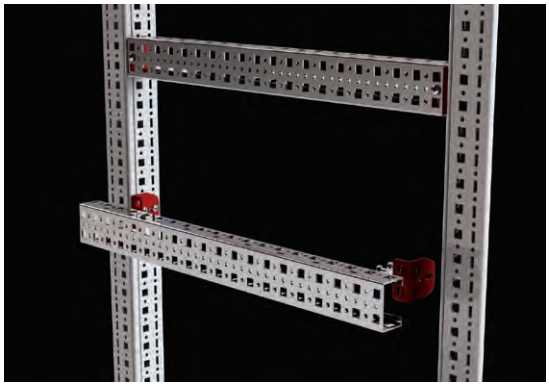

Relevance : TEOS, NEO Modular, NEO Monoblock, NEO HC Modular, NEO HC Monoblock,

Material : 2 mm mild steel + zinc coated

Product Code : **944.421** (12 pcs.) (Screws included)
944.420 (100 pcs.) (Screws included)

- Thanks to this bracket, the enclosure body can be mounted, and the scissile rail can be mounted on the enclosure body. It holds tightly on the enclosure body thanks to its fitting hook. The low relief on the front surface allows for a strong profile hold on the bracket and removes the weight off the bolt.
- Recommended for profile mounting on the body.
- Moves on the profile or body at 25,00mm long steps.

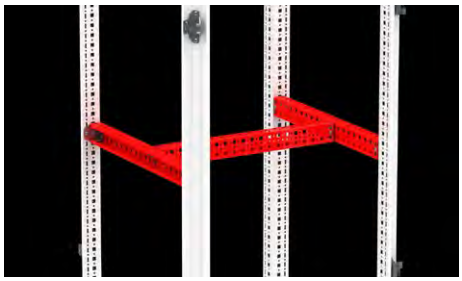

Frame width and depth combination

Vertical frame combination

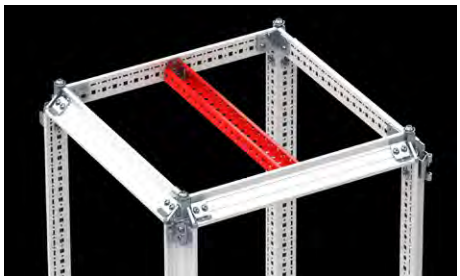

Frame top combination

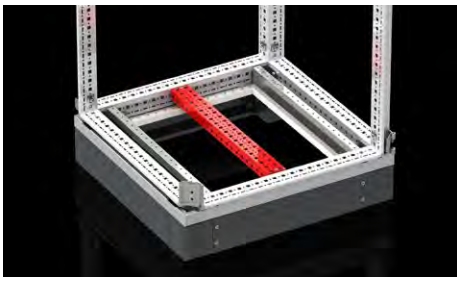

Frame bottom combination

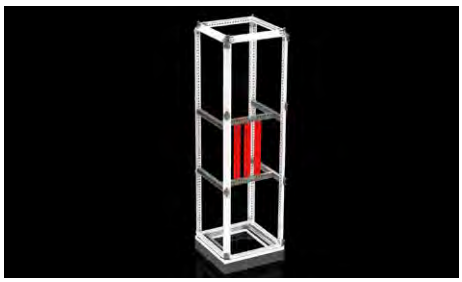

Vertical rail combination

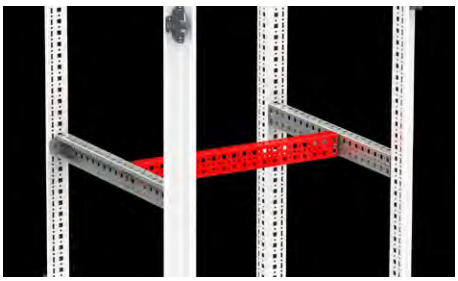

Rail width combination (horizontal)

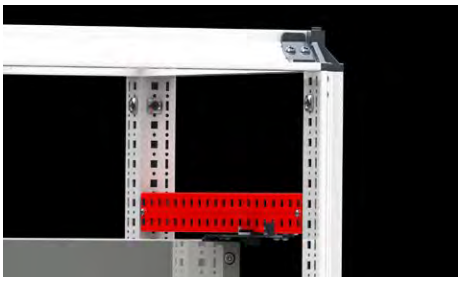

Mounting plate combination

ADJUSTABLE RAIL BRACKET (TYPE T)

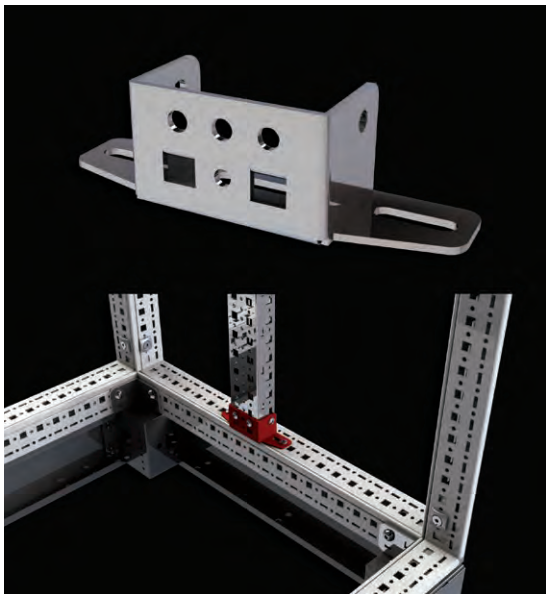

Relevance : TEOS, NEO Modular, NEO Monoblock, NEO HC Modular, NEO HC Monoblock,

Material : 2 mm mild steel + zinc coated

Product Code : **944.433** (4 pcs) (screws included)

- Used for mounting the scissile rail on the enclosure body.
- Its slot perforations provides the profile with a 25mm axis movement.
- The rail is able to reciprocate in vertical position. Thanks to this, the equipments mounted on the rail can be aligned to the inner panel position.
- The busbar support is used to fix the top part on the body when the rail is depth-combined on the body. See page 213
- The bulge placed on the combination part of the bracket and the rail holds the rail weight and takes the load off the screw.

25mm movement ability on the axis

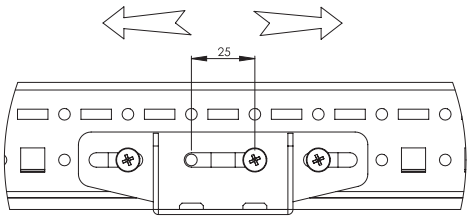

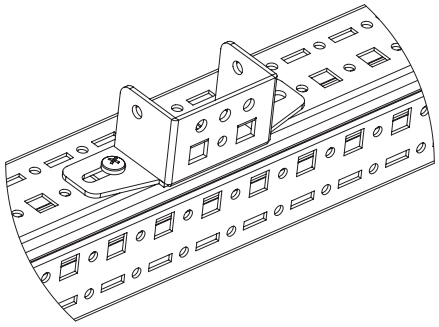

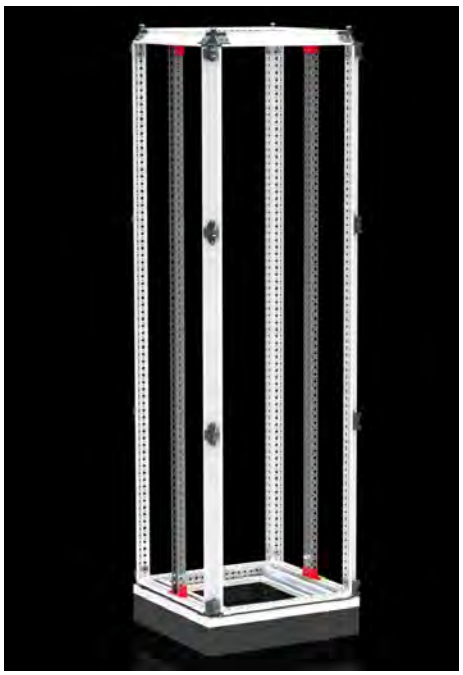

Vertical combination on the frame

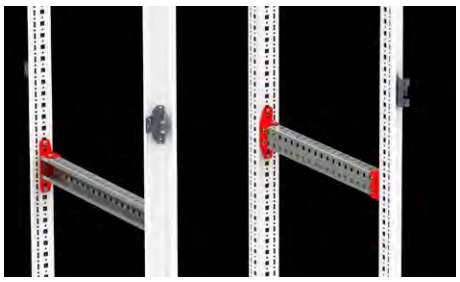

Depth combination on the frame

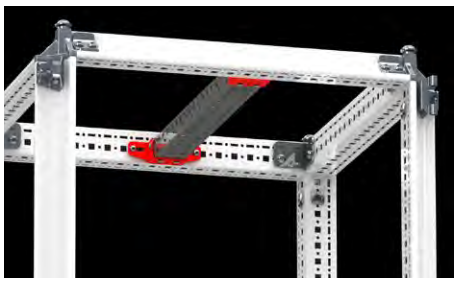

Combination on the top frame

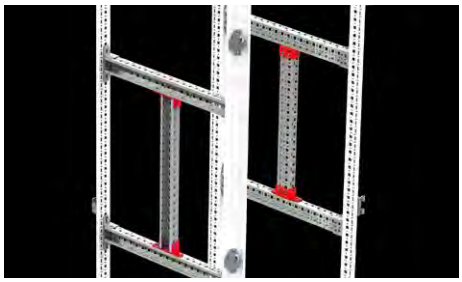

Vertical combination on the rail

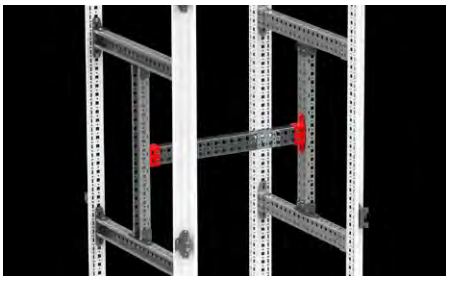

Width combination on the rail (vertical)

MOUNTING RAIL and MOUNTING PLATE

ADJUSTABLE RAIL BRACKET (TYPE L)

Relevance : TEOS, NEO Modular, NEO Monoblock, NEO HC Modular, NEO HC Monoblock,

Material : 2 mm mild steel + zinc coated

Product Code : **944.434** (4 pcs) (screws included)

- Used for mounting the scissile rail on the enclosure body.
- Its slot perforations provides the profile with a 25mm axis movement
- It is possible to adjust the equipment on the rail placed in the width position according to the inner panel.
- Positions the rail vertically on the enclosure and allows for busbar support mounting. See page 213

25mm movement ability on the axis

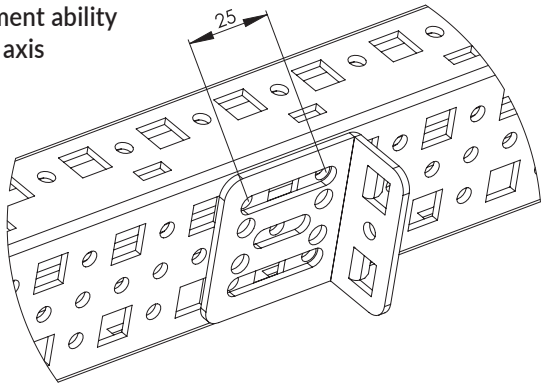

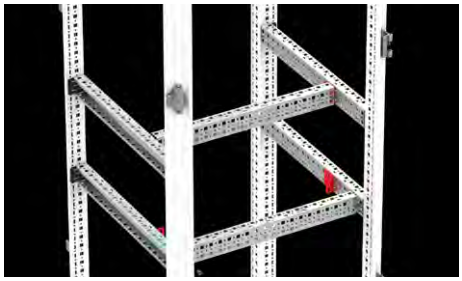

Width combination on the rail

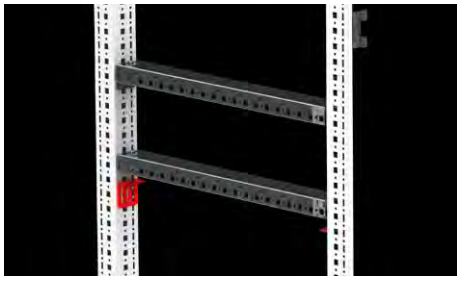

Frame depth combination

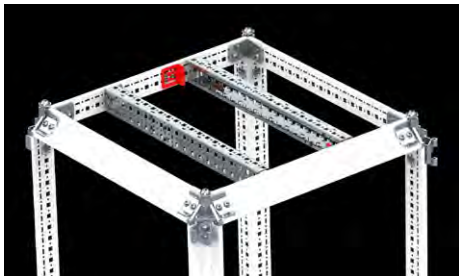

Frame top combination (vertical)

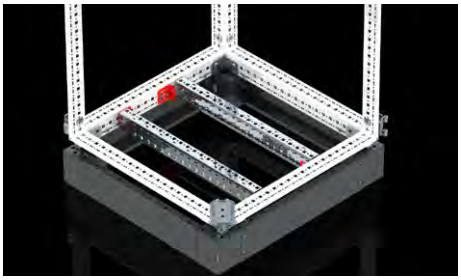

Frame bottom combination (vertical)

MOUNTING RAIL and MOUNTING PLATE

25A - 630A MCCB KIT (TEOS, NEO Modular, NEO Monoblock, NEO HC Modular, NEO HC Monoblock)

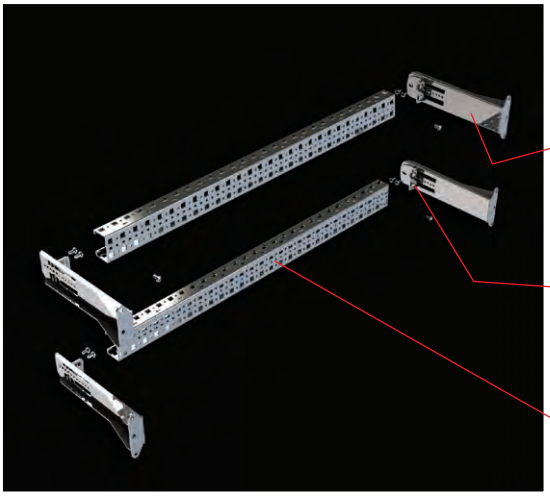

Relevance : TEOS, NEO Modular, NEO Monoblock,
NEO HC Modular, NEO HC Monoblock,

4x Kit Bracket

Material : 2 mm mild steel + zinc coated
Product Code : **944.436** (2 pcs.) (Screws included)

4 x Plug-in Rail Bracket

Product Code : **944.420** (100 pcs.) (Screws included)
944.421 (12 pcs) (Screws included)

2x Scissile Width Rail

PRODUCT CODE	ENCLOSURE WIDTH (W) (mm)	RAIL NET LENGHT (mm)	PACKS OF
944.422	400	291	2
944.424	600	491	2
944.432	700	591	2
944.425	800	691	2

1x Part Mounting Plate

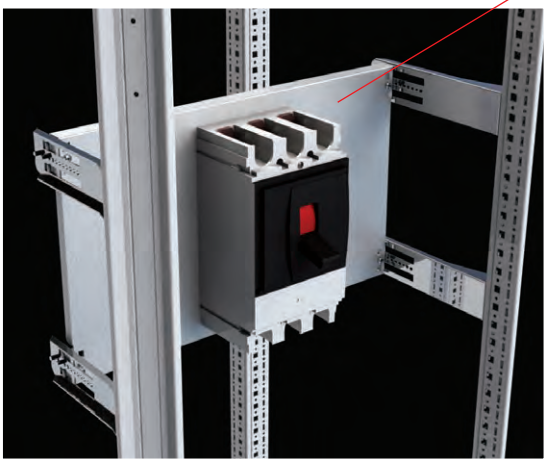

- This is the kit which enables compact MCCB (from lowest upto 630 Amperes) mounting.
- As mounted from the front part of the enclosure, it makes it possible for a copper busbar installation by creating space at the back of the enclosure
- Enables strong mounting with the plug-in rail bracket, and 7,00mm reciprocating motion ability.
- Offers a more economical solution as it eliminates the use of an entire depth rail.
- It is accord with cover plate.

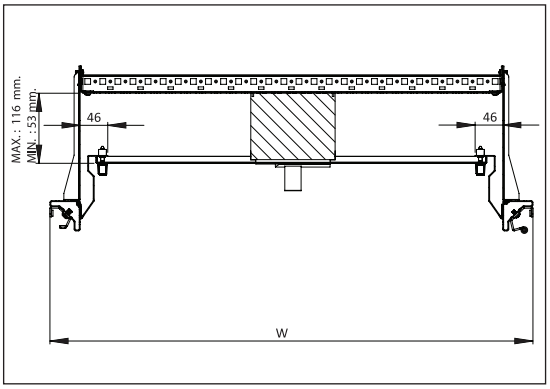

MOUNTING RAIL and MOUNTING PLATE

MCB AND TERMINAL KIT (BACK-MOUNTED CABLE DUCT)

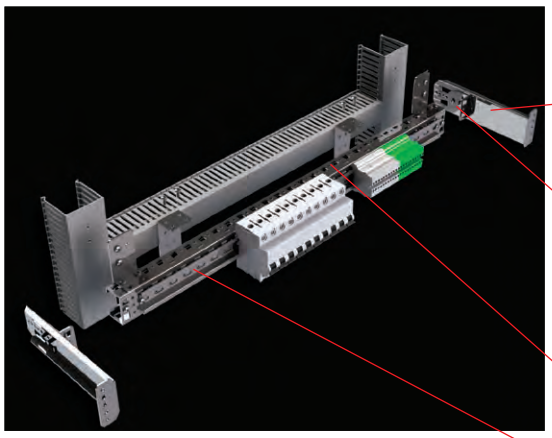

Relevance : TEOS, NEO Modular, NEO Monoblock,
NEO HC Modular, NEO HC Monoblock,

2x Kit Bracket

Material : 2 mm mild steel + zinc coated
Product Code : **944.436** (2 pcs.) (Screws included)

2x Plug-in rail bracket

Product Code : **944.420** (100 pcs.) (Screws included)
944.421 (12 pcs.) (Screws included)

1x scissile width rail

PRODUCT CODE	ENCLOSURE WIDTH (mm)	RAIL NET LENGHT (mm)	PACKS OF
944.422	400	291	2
944.424	600	491	2
944.432	700	591	2
944.425	800	691	2

1x terminal / MCB rail H7,5 mm (2 meters)

Product Code : **990.102** (1 pcs.)

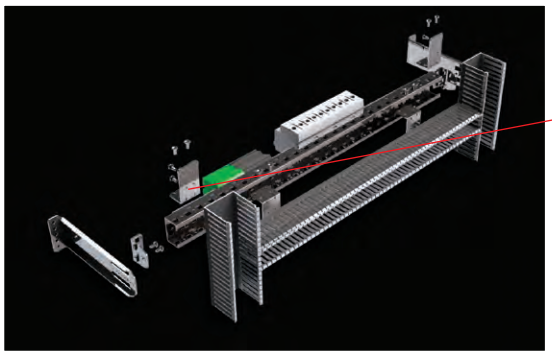

3x duct bracket

Material : 2 mm mild steel + zinc coated
Product Code : **944.437** (12 pcs.) (Screws included)

- Mounts MCBs and terminals on the front enclosure panel without depth profiles.
- Enables to connect cable ducts from the rear for MCB mountings and mount a maximum number of MCBs.
- Suitable size: 60x60mm for vertical ducts and 40x60mm for horizontal cable duct layings
- Mounted on the enclosure body, the mounting kits are designed with 7,00mm stepping perforations and enable mounting both on the MCBs and the terminal boxes.
- Maximum number of MCBs on the mounting rail:

Enclosure Width	MCB Capacity
400	10
600	22
700	28
800	34

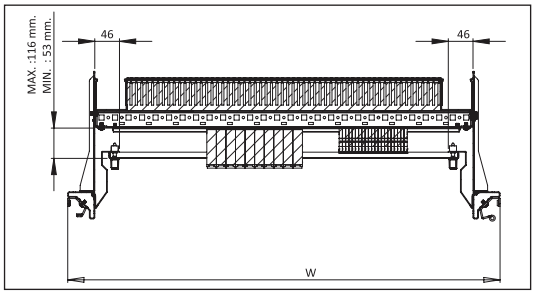

MCB KIT (FRONT-MOUNTED CABLE DUCT)

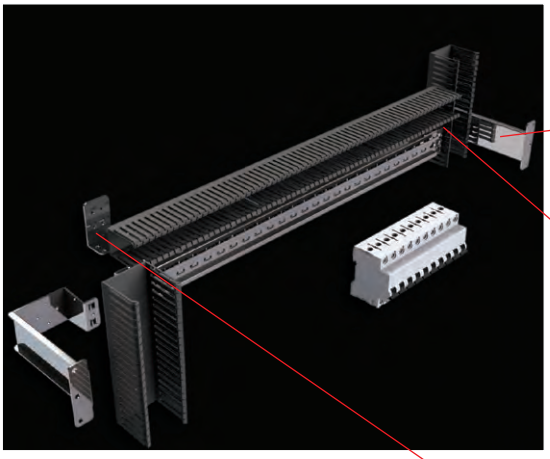

Relevance : TEOS, NEO Modular, NEO Monoblock,
NEO HC Modular, NEO HC Monoblock,

2x MCB kit:

Material : 2 mm mild steel + zinc coated
Product Code : **944.478** (2 pcs.) (Screws included)

1x Scissile width MCB rail.

PRODUCT CODE	ENCLOSURE WIDTH (mm)	RAIL NET LENGHT (mm)	PACKS OF
944.439	600	341	1
944.440	700	441	1
944.441	800	541	1

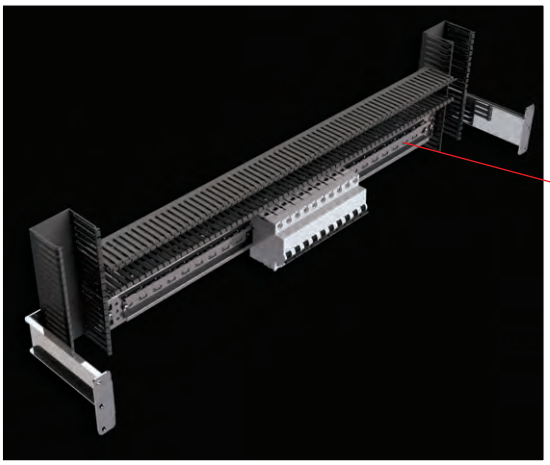

2x duct bracket

Material : 2 mm mild steel + zinc coated
Product Code : **944.437** (12 pcs.) (Screws included)

1x terminal / MCB rail H7,5 mm (2 meters)

Product Code : **990.102** (1 pcs.)

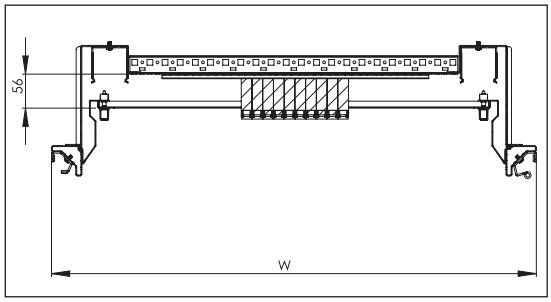

- Mounts the MCBs on the front enclosure body without depth rails.
- Cable ducts can be connected from the front for MCB mountings.
- Suitable size: 60x60mm for vertical cables and 40x60mm for horizontal cable duct layings.
- Maximum number of MCBs on the mounting rail:

Enclosure Width	MCB Capacity
400	5
600	16
700	22
800	28

SHELF and INTERIOR PARTS

DIVIDING PANEL

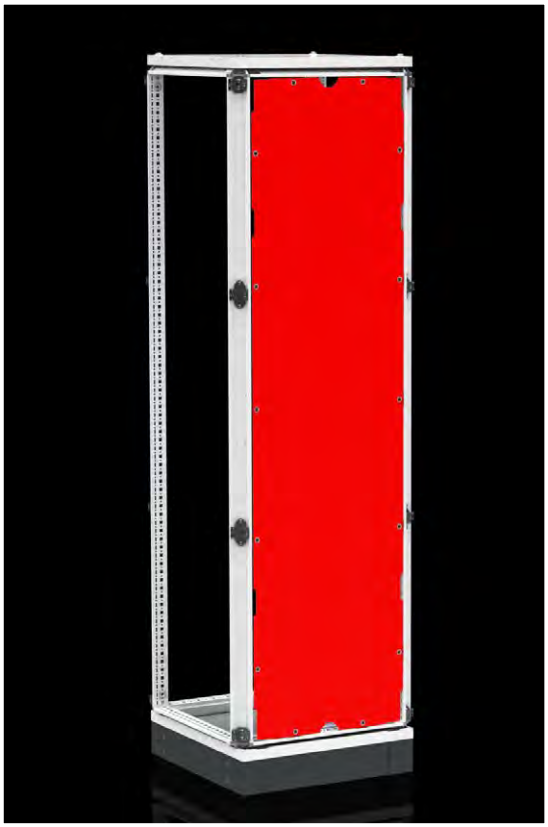

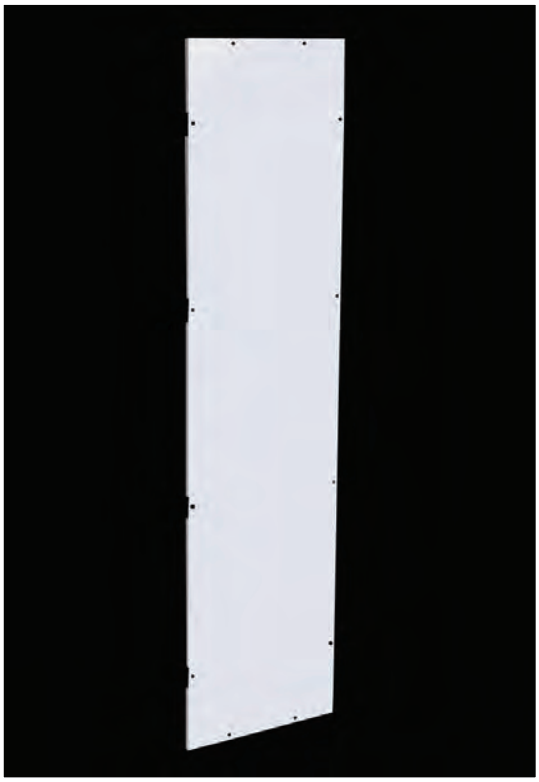

Relevance : TEOS

Material : 1,5 mm Galvanised + RAL 7035 coating

Supply Includes : 1 pcs panel and assembling parts.

- Used for separating enclosures and mounting applications.

TEOS ENCLOSURE		
Product Code.	HEIGHT (mm)	DEPTH (mm)
935.001	1800	400
935.002	1800	500
935.003	1800	600
935.004	1800	800

TEOS ENCLOSURE		
Product Code.	HEIGHT (mm)	DEPTH (mm)
935.005	2000	400
935.006	2000	500
935.007	2000	600
935.008	2000	800
935.009	2200	600

DIVIDING PANEL

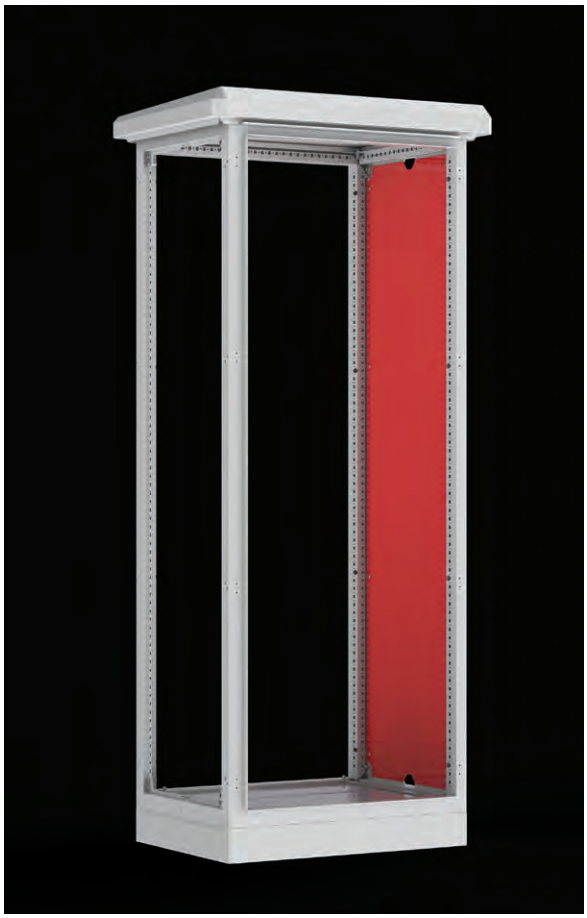

Relevance : NEO Monoblock, NEO Modular, NEO HC Modular, NEO HC Monoblock

Material : 1,5 mm Mild steel + RAL 7035 coating

Supply Includes : 1 Pcs panel ve assembly parts

- Used for separating enclosures and mounting applications.

PRODUCT CODE	Height (H) mm	Depth (D) mm
936.184	1800	400
936.185	1800	500
936.186	1800	600
936.204	2000	400
936.205	2000	500
936.206	2000	600
936.208	2000	800

SHELF and INTERIOR PARTS

DOOR RAIL FOR CABLE DUCT

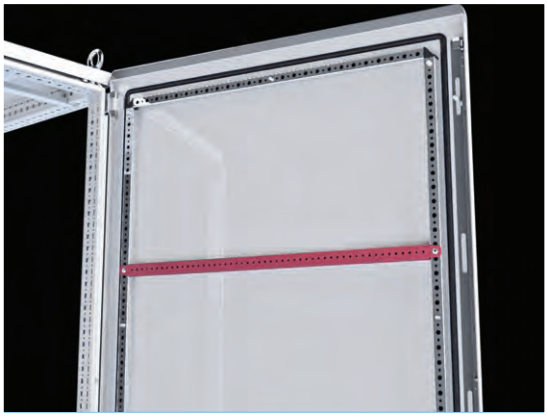

Relevance : TEOS, NEO Modular, NEO Monoblock, NEO HC Modular, NEO HC Monoblock

Related size : ENCLOSURE WIDTH

Material : 2,00 mm mild steel + zinc-coated

Supply Includes : 1 pcs door rail and assembling parts.

ATTENTION : 2 pcs of door channel profile accessory needed for 800 mm, 1000 mm and 1200mm wide double doors.

PRODUCT CODE	ENCLOSURE WIDTH (mm)
997.104	400 single door
997.113	600 single door
997.116	700 single door
997.114	800 single door
997.118	800 double door
997.111	1000 single door
997.115	1000 double door
997.112	1200 double door

METAL PLAN POCKET

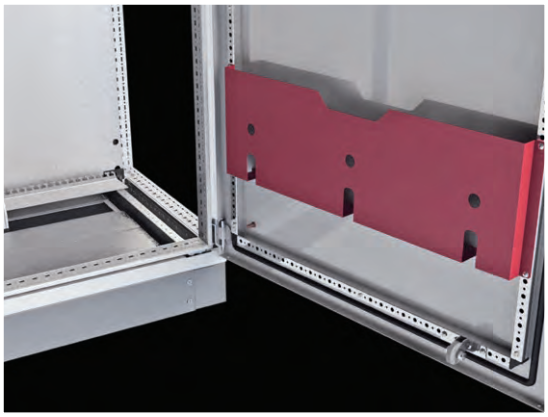

Relevance : TEOS, NEO Modular, NEO Monoblock, NEO HC Modular, NEO HC Monoblock

Related size : ENCLOSURE WIDTH

Material : 1,50 mm mild steel + RAL 7035 powder-coating

Supply Includes : 1 pcs metal plan pocket and assembling parts

PRODUCT CODE	ENCLOSURE WIDTH (mm)
994.704	400 single door
994.706	600 single door
994.707	700 single door
994.708	800 single door
994.718	800 double door
994.711	1000 single door
994.710	1000 double door
994.712	1200 double door

DOOR STOPPER

Relevance : TEOS

- It is using for angle limitation door.

Product Code : 905.202 door stopper (right)
905.203 door stopper (left)

DOOR STOPPER

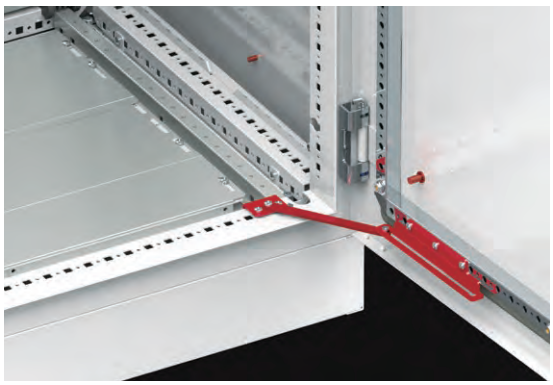

Relevance : NEO Modular, NEO Monoblock,
NEO HC Modular, NEO HC Monoblock

- It is using for angle limitation door.

Product Code : 905.204 door stopper

SHELF and INTERIOR PARTS

LAMP RAIL

Relevance : TEOS, NEO Modular, NEO Monoblock, NEO HC Modular, NEO HC Monoblock

Related size : ENCLOSURE WIDTH

Material : 2,00 mm mild steel + zinc-coated

Supply Includes : 1 pcs lamp bracket rail and assembling parts

PRODUCT CODE	ENCLOSURE WIDTH (mm)
903.204	400
903.206	600
903.207	700
903.208	800
903.210	1000
903.212	1200

SWITCH BRACKET

Relevance : TEOS, NEO Modular, NEO Monoblock, NEO HC Modular, NEO HC Monoblock

Material : 2,00 mm mild steel + zinc-coated

Supply Includes : 1 pcs switch bracket and assembling parts

Product Code : 903.300

TEOS AND NEO
INTERIOR COVER PLATE SYSTEM

- For covering off the electrical equipment from the front of enclosure
- It is modular structure and can be selected as whole or partly.
- Partial covers are with hinges

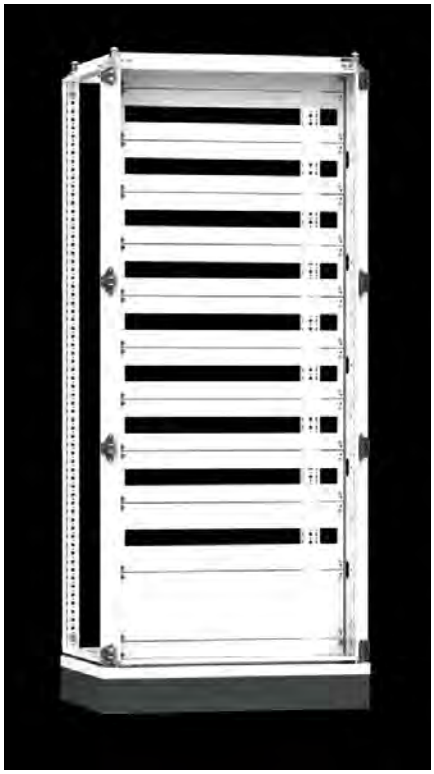

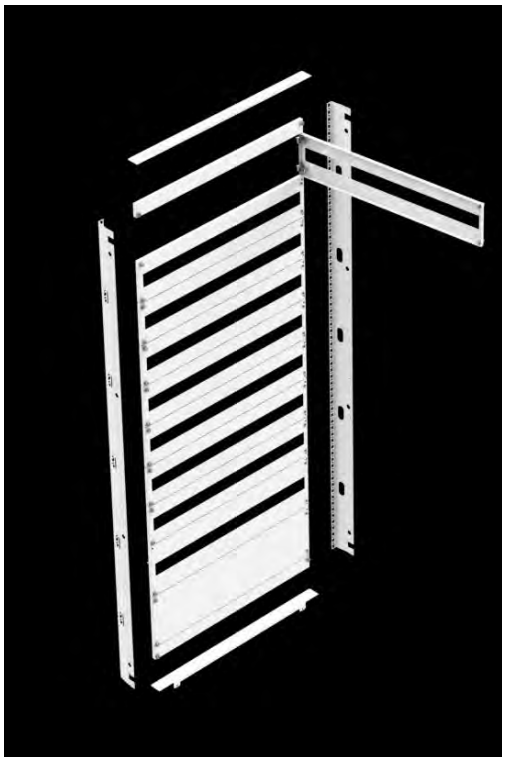

INTERIOR COVER PLATE

COVER PLATE FRAME SET

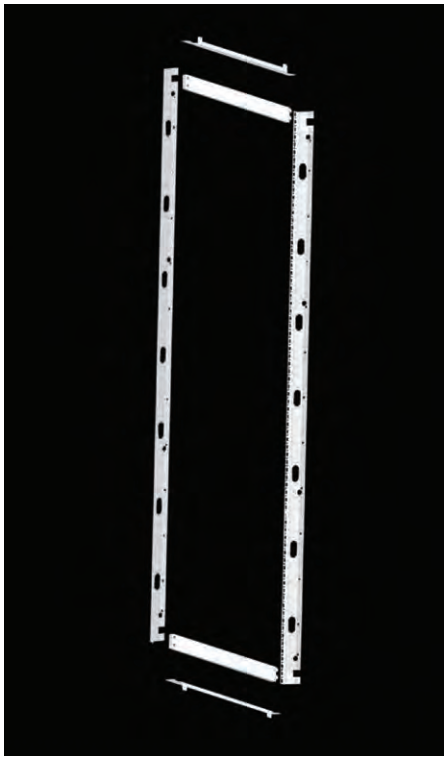

Relevance : TEOS, NEO Modular, NEO Monoblock, NEO HC Modular, NEO HC Monoblock

Material : 1,50 mm mild steel + RAL 7035 powder coating

Supply Includes : 2 pcs vertical profile, 2 pcs bottom-top closer, 2 pcs bottom-top cover plate, 4 pcs cable protection and assembly parts.

ATTENTION : You can find the size of the vertical inner panel profile in the drawing and table. Cover plate sizes will be determined according to this size

PRODUCT CODE	ENCLOSURE WIDTH (W)	ENCLOSURE HEIGHT (H)	COVER FRAME NET HEIGHT (H1) (mm)
953.401	400	1800	1600
953.402	400	2000	1800
953.403	600	1200	1000
953.404	600	1600	1400
953.405	600	1800	1600
953.406	600	2000	1800
953.408	700	2000	1800
953.409	800	1200	1000
953.410	800	1600	1400
953.411	800	1800	1600
953.412	800	2000	1800
953.465	1000	1800	1600
953.466	1000	2000	1800

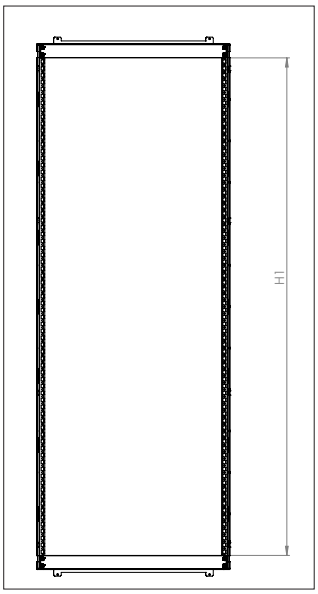

INTERIOR COVER PLATE

COVER PLATE

Relevance : TEOS, NEO Modular, NEO Monoblock, NEO HC Modular, NEO HC Monoblock

Material : 1,50 mm mild steel + RAL 7035 powder coating

Supply Includes : 1 pcs cover plate and mounting parts

IMPORTANT : The usable size of the inner lid length profile (inner lidnet height H1) is shown in the drawing and on the table. The inner lid will be determined according to this measure.

NECESSARY : To fix the interior cover plate, the appropriate interior cover frame set is required for the board size. See page 181

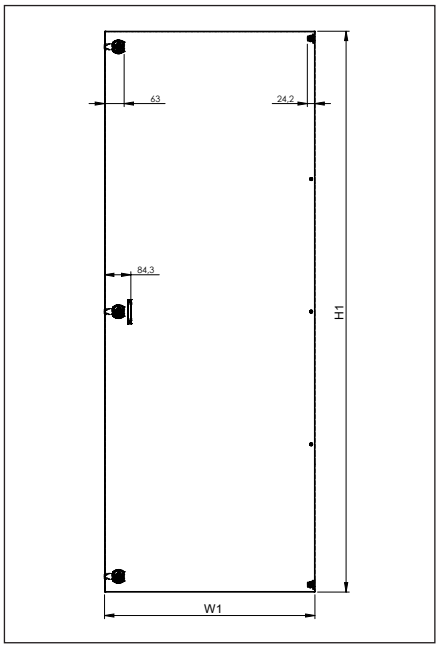

PRODUCT CODE	ENCLOSURE WIDTH (W)	ENCLOUSURE NET HEIGHT (W1)	PLATE NET HEIGHT (H1)	INTERIOR COVER PLATE NET HEIGHT
713.418	400	1800	273	1597
713.420	400	2000	273	1797
713.612	600	1200	473	997
713.616	600	1600	473	1397
713.618	600	1800	473	1597
713.620	600	2000	473	1797
713.720	700	2000	573	1797
713.812	800	1200	673	997
713.816	800	1600	673	1397
713.818	800	1800	673	1597
713.820	800	2000	673	1797

INTERIOR COVER PLATE

PARTIAL COVER PLATE

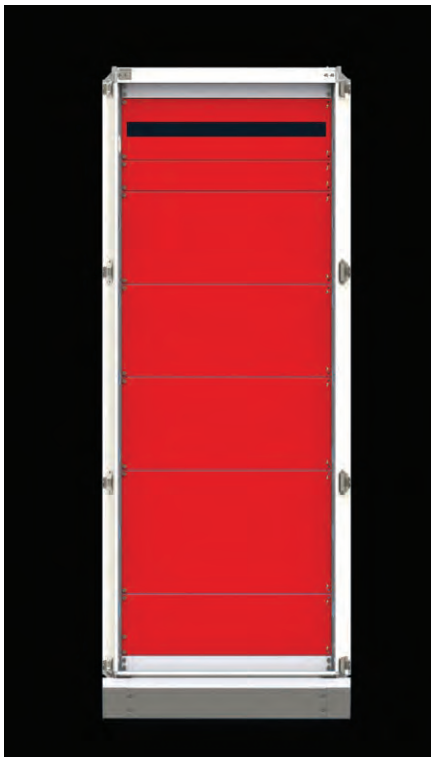

Relevance : TEOS, NEO Modular, NEO Monoblock, NEO HC Modular, NEO HC Monoblock

Material : 1,50 mm mild steel, RAL 7035

Supply Includes : 1 pcs cover plate and assembling parts

NECESSARY : To fix the interior cover plate, the appropriate interior cover frame set is required for the board size. See page 181

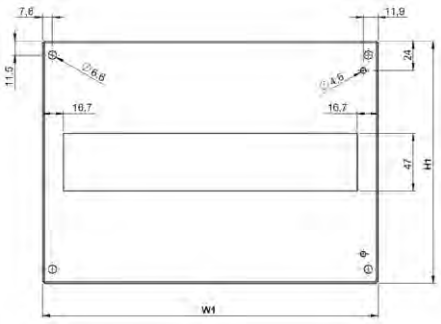

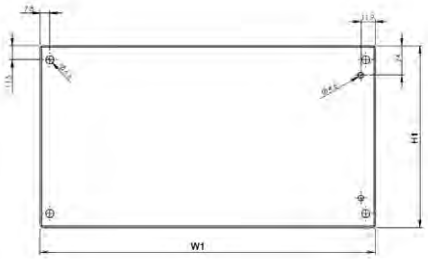

PRODUCT CODE	ENCLOSURE WIDTH (W)	PLATE NET WIDTH (W1)	PLATE NET HEIGHT (H1)	MCB QTY
954.405	400	273	50	-
954.410			100	-
954.415			150	-
954.416			150 W	12
954.420			200	-
954.421			200 W	12
954.425			250	-
954.430			300	-
954.431			300 W	12
954.435			350	-
954.440			400	-
954.450			500	-
954.460			600	-
954.605	600	473	50	-
954.610			100	-
954.615			150	-
954.616			150 W	24
954.620			200	-
954.621			200 W	24
954.625			250	
954.630			300	-
954.631			300 W	24
954.635			350	-
954.640			400	-
954.650			500	-
954.660			600	-
954.705	700	573	50	-
954.710			100	-
954.715			150	-
954.716			150 W	30
954.720			200	-
954.721			200 W	30
954.725			250	-
954.730			300	-
954.731			300 W	30
954.735			350	
954.740			400	-
954.750			500	-
954.760			600	-
954.805	800	673	50	-
954.810			100	-
954.815			150	-
954.816			150 W	36
954.820			200	-
954.821			200 W	36
954.825			250	-
954.830			300	-
954.831			300 W	36
954.835			350	-
954.840			400	-
954.850			500	-
954.860			600	-

PARTIAL DOOR SYSTEM

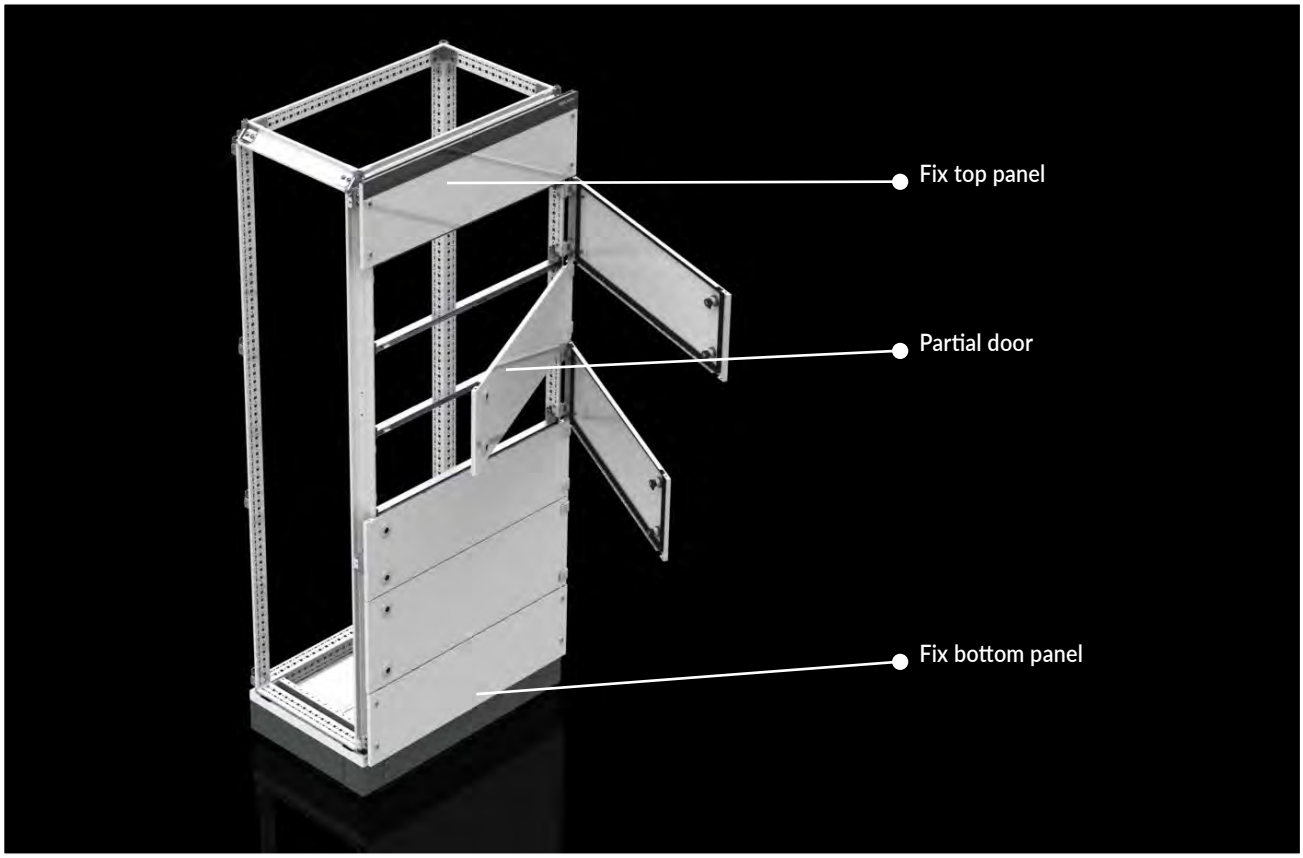

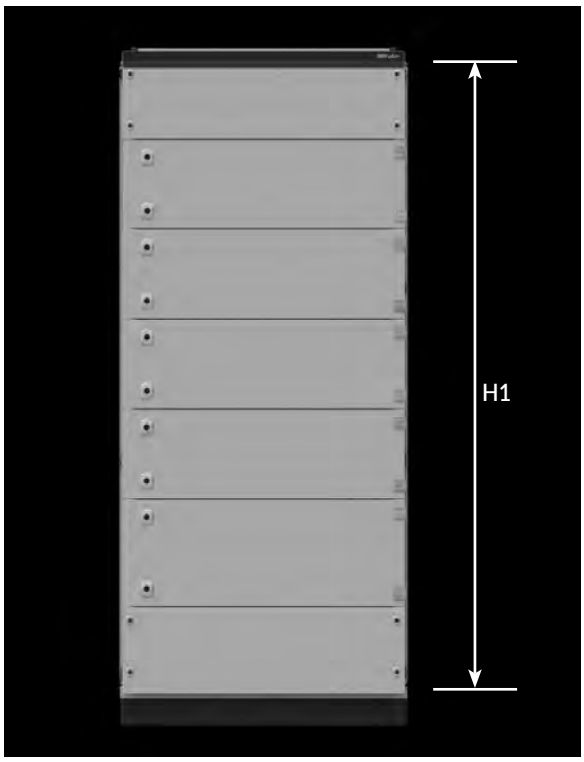

ENCLOSURE HEIGHT (H)	AVAILABLE NOMINAL HEIGHT (H1)
1200	1100
1600	1500
1800	1700
2000	1900
2200	2100

IMPORTANT : 1 piece of fixed top cover and 1 piece of fixed bottom cover shall be chosen for each enclosure.

IMPORTANT : The sum of the door heights must match the available nominal height (H1).

PARTIAL DOOR SYSTEM

PARTIAL FRONT DOOR

Relevance : TEOS

Material : 1,50 mm mild steel + RAL 7035 powder coating

Supply Includes : 1 pcs partial door,
1 piece door splitting profile and fittings.

PRODUCT CODE	ENCLOSURE WIDTH (W)	DOOR HEIGHT
853.415	400	150
853.420	400	200
853.425	400	250
853.430	400	300
853.435	400	350
853.440	400	400
853.445	400	450
853.450	400	500
853.460	400	600
853.480	400	800
853.410	400	1000
853.615	600	150
853.620	600	200
853.625	600	250
853.630	600	300
853.635	600	350
853.640	600	400
853.645	600	450
853.650	600	500
853.660	600	600
853.680	600	800
853.610	600	1000
853.815	800	150
853.820	800	200
853.825	800	250
853.830	800	300
853.835	800	350
853.840	800	400
853.845	800	450
853.850	800	500
853.860	800	600
853.880	800	800
853.810	800	1000

PARTIAL FIX PANEL(TOP)

Relevance : TEOS

Material : 1,50 mm mild steel+ RAL 7035 powder coating

Supply Includes : 1 pcs partial fix panel,
1 piece tac profile,
1 piece door splitting profile and fittings.

PARTIAL FIX PANEL(BOTTOM)

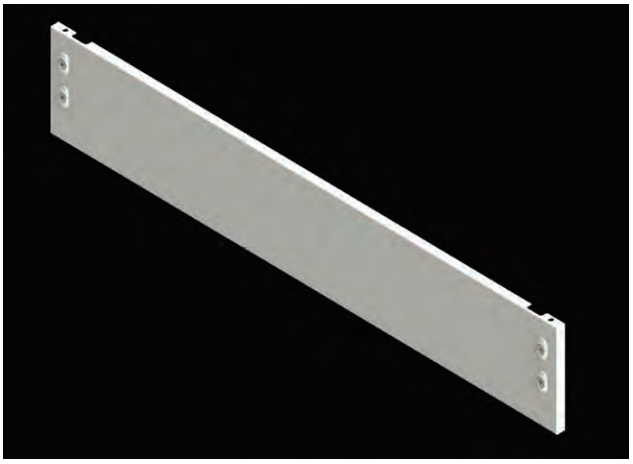

Relevance : TEOS

Material : 1,50 mm mild steel+ RAL 7035 powder coating

Supply Includes : 1 pcs partial fix panel and assembling parts.

TOP PANEL PRODUCT CODE	BOTTOM PANEL PRODUCT CODE	ENCLOSURE Width(W)	DOOR HEIGHT
854.410	855.410	400	100
854.420	855.420	400	200
854.610	855.610	600	100
854.620	855.620	600	200
854.810	855.810	800	100
854.820	855.820	800	200

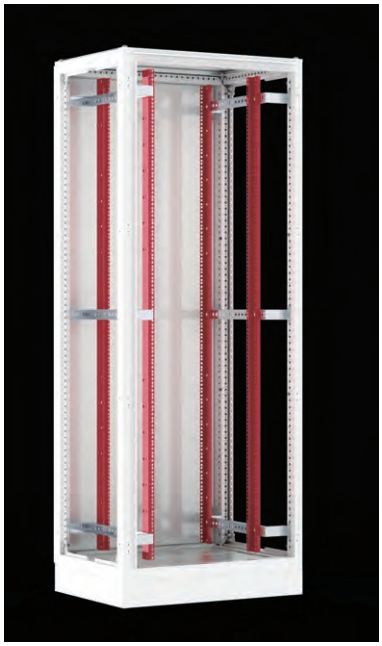

19” COMBINATION PROFILES

Relevance : TEOS, NEO Modular, NEO Monoblock, NEO HC Modular, NEO HC Monoblock

Material : 2,00 mm mild steel+ zinc-plating

Supply Includes : 4 pcs profile and combination screws

REQUIRED : 6 pcs scissile rail for 600mm width enclosure applications on depth side of enclosure. In 800 mm width enclosures, 6 pcs 800 mm width adapter requires. See page 186

PRODUCT CODE	ENCLOSURE HEIGHT(H)	UNIT U
944.930	1200	24
944.931	1600	33
944.932	2000	42

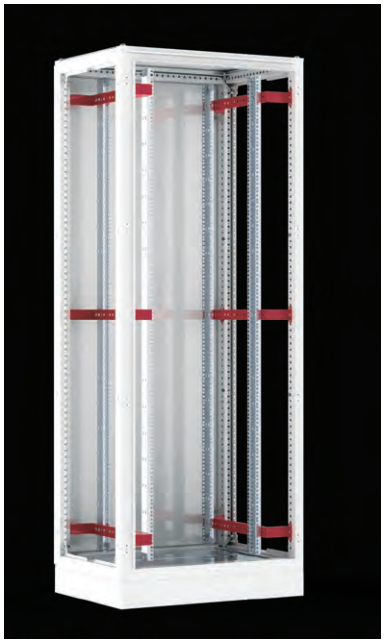

800 mm WIDTH ADAPTER (19”)

Relevance : TEOS, NEO Modular, NEO Monoblock, NEO HC Modular, NEO HC Monoblock

Material : 2,00 mm mild steel+ zinc-plating

Supply Includes : 6 pcs adapter and assembling parts.

Product Code : Enclosure depth: 600 mm: **944.933**
Enclosure depth: 800 mm: **944.934**

MOUNTING ACCESORIES

19” SWING FRAME

Relevance : TEOS, NEO Modular, NEO Monoblock, NEO HC Modular, NEO HC Monoblock

Material : 2,00 mm mild steel + RAL 7035 coating

Supply Includes : 1 set of swing frame (lock-hinges included)

	ENCLOSURE		
PRODUCT CODE	WIDTH (W)	HEIGHT (H)	UNIT U
944.935	600	1200	22
944.936	600	1600	31
994.937	600	1800	36
944.938	600	2000	40
994.939	600	2200	45
944.940	800	1200	22
944.941	800	1600	31
944.942	800	1800	36
944.943	800	2000	40
944.944	800	2200	45

FIXED and MOVABLE SHELF

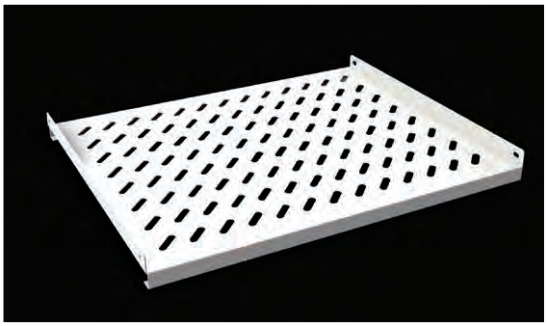

Relevance : TEOS, NEO Modular, NEO Monoblock, NEO HC Modular, NEO HC Monoblock

Material : 1,50 mm mild steel+RAL 7035 coating

Supply Includes : 1 pcs shelf and combination parts. It may be used with Rails.

REQUIRED : According to depth of enclosures, a pair of depth rail and 4 rail barckets are needed.

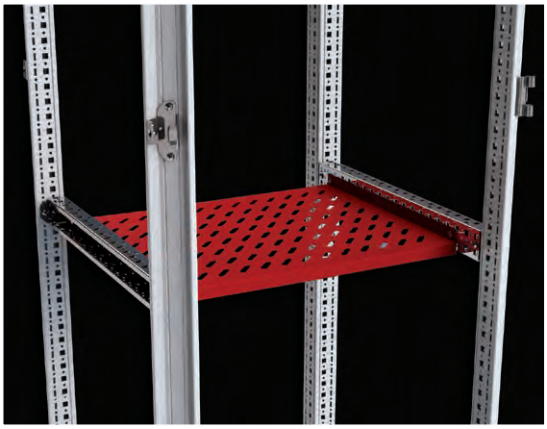

	ENCLOSURE	
PRODUCT CODE	WIDTH (mm)	DEPTH (mm)
FIXED SHELF IN FULL SIZE		
945.200	600	600
945.201		800
MOVABLE SHELF IN FULL SIZE		
945.400	600	600
945.401		800
FIXED SHELF IN 19" SYSTEM		
945.204		600
945.205		800
MOVABLE SHELF IN 19" SYSTEM		
945.404		600
945.405		800

	ENCLOSURE	
PRODUCT CODE	WIDTH (mm)	DEPTH (mm)
FIXED SHELF IN FULL SIZE		
945.202	800	600
945.203		800
MOVABLE SHELF IN FULL SIZE		
945.402	800	600
945.403		800

KNITTED EARTHING CABLE

Material : Copper + tin-plating

Supply Includes : 5 pcs cable and screws

Product Code : **991.201** (10 pcs)
991.202 (5 pcs)
991.204 (1 pcs)

M6 HIDE NUT

- Necessary for installing the support and mounting rails on the enclosure. Installed from square perforations placed on the front surface of closed profiles.

Product Code : **994.170** (100 pcs packs)
994.171 (10 pcs packs)

COMFORT LOCKING HANDLE & INSERTS

Relevance : TEOS,

Product Code :

COMFORT Locking Handle with 5333 insert	: 950.103
Insert Doublebit 5,00mm	: 950.250
Insert Triangle 9,00mm	: 950.252
Insert Square 8,00mm	: 950.251

NECESSARY : In the case of selecting of the other lock inserts (Doublebit , Triangle and Square), the corresponding key must also be selected.

COMFORT LOCKING HANDLE & INSERTS

Relevance : NEO Modular, NEO Mb

Reference no :

COMFORT Locking Handle with 5333 insert	: 950.117
COMFORT Locking Handle (PAD LOCK) with 5333 insert	: 951.214
Insert Doublebit 5,00mm	: 950.110
Insert Triangle 9,00mm	: 950.115
Insert Square 8,00mm	: 950.116

NECESSARY : In the case of selecting of the other lock inserts (Doublebit , Triangle and Square), the corresponding key must also be selected.

KEYS

Relevance : All Lock Systems

Material : Zamak + Zinc-Coating

Supply Includes : Key 1 pcs
Eurokey 2 pcs

PRODUCT CODE	MODEL
952.101	5 mm Double-bit
952.102	8 mm Square
952.103	9 mm Triangular
952.300	Eurokey (5333)

KMT-1000 CONTROL DESK 195

KMT-2000 CONTROL DESK 196

KMP-3000 CONTROL DESK 197

PC CABINET 198

CONTROL DESKS

- Hinged door on front-rear in KMT-2000 and KMP-3000.
- Standard damper support
- Single, fixed mounting plate for KMT-1000 series; double and sliding mounting plates for KMT-2000 and KMP-3000 series.
- Standard foamed gland plate
- Standard H100mm plinth

KMT - 1000 CONTROL DESK

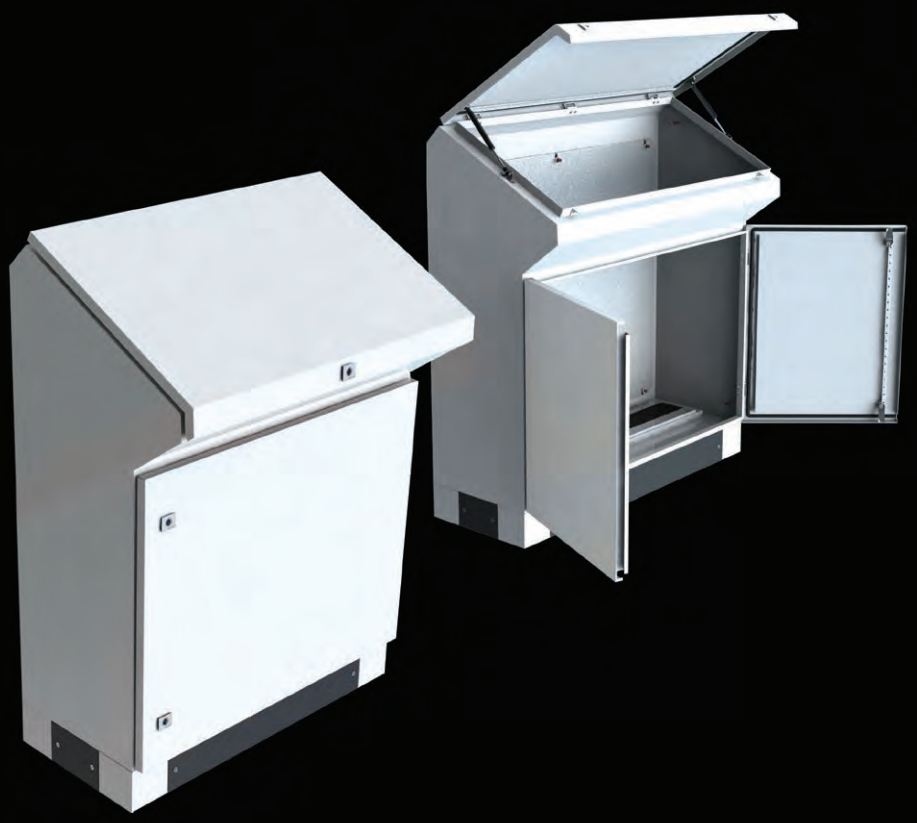

Material : Body, Doors : 1,50 mm Mild Steel + RAL 7035 electrostatic powder coating
Support plinth corner : 2.00 mm Galvanized steel+RAL 7035 electrostatic powder coating
Mounting plate : 2.00 mm Galvanized steel

IP Rate : IP 55

Supply includes : 1 pcs compact body, 1 pcs door, 1 pcs top panel with damper, 1 pcs mounting plate, 1 set of gland plate with foam, 1 pcs H100 plinth

- Please see page 209 for the stainless steel version.
- Please see page 287 for technical drawings.

PRODUCT CODE	ENCLOSURE WIDTH (mm)	DOOR TYPE
516.350	600	SINGLE
518.350	800	SINGLE
510.350	1000	DOUBLE
512.350	1200	DOUBLE

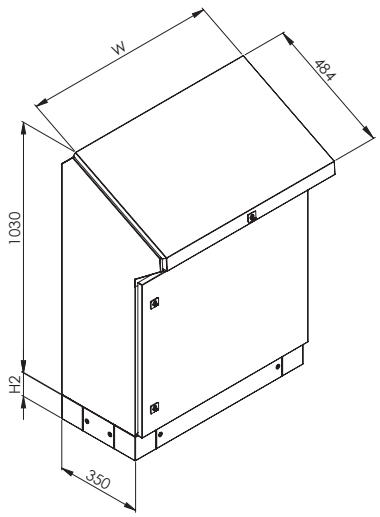

KMT - 2000 CONTROL DESK

Material : Body, panels : 1,50 mm Mild Steel + RAL 7035 electrostatic powder coating
Support plinth corner : 2.00 mm Galvanized steel+RAL 7035 electrostatic powder coating
Mounting plate : 2.00 mm Galvanized steel

IP Rate : IP 55

Supply includes : 1 pcs compact body, 1 pcs front door, 1 pcs top panel with damper, 1 pcs rear door, 2 pcs mounting plate, 1 pcs gland plate with foam, 1 set of H100mm plinth

- Standard top panel with damper
- Hinged, locked back door
- Two separate sliding mounting plates at the front and back.
- Please see page 209 for the stainless steel version.
- Please see page 288 for the technical drawings.

PRODUCT CODE	ENCLOSURE WIDTH (mm)	DOOR TYPE
526.400	600	SINGLE FRONT + REAR
528.400	800	SINGLE FRONT + REAR
520.400	1000	DOUBLE FRONT + REAR
522.400	1200	DOUBLE FRONT + REAR

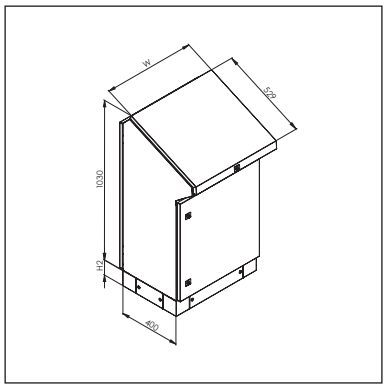

KMP - 3000 CONTROL DESK

Material : Body, panels : 1,50 mm Mild Steel + RAL7035 electrostatic powder coating
Support plinth corner : 2.00 mm Galvanized steel + RAL 7035 electrostatic powder coating
Mounting plate : 2.00 mm Galvanized steel

IP Rate : IP 55

Supply includes : 1 pcs main body, 1 pcs console body and damper panel, 1 pcs top panel, 1 pcs front panel, 1 pcs front door, 1 pcs rear door, 2 pcs mounting plates, 1 set of gland plate with foam, 100 mm plinth set

- Standard damper on the console panel
- Hinged door application on four separate surfaces: back door, front door, console panel and top panel.
- Two separate sliding mounting plate at the front and back.
- Please see page 289 for technical drawings.

PRODUCT CODE	ENCLOSURE WIDTH (mm)	DOOR TYPE
538.450	800	SINGLE FRONT + REAR
530.450	1000	DOUBLE FRONT + REAR
532.450	1200	DOUBLE FRONT + REAR

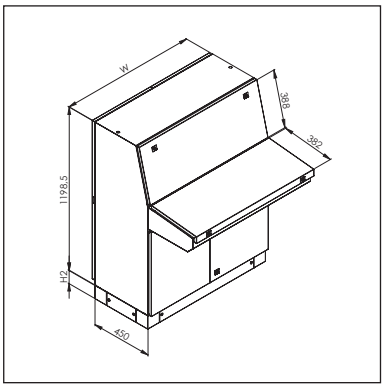

PC CABINET

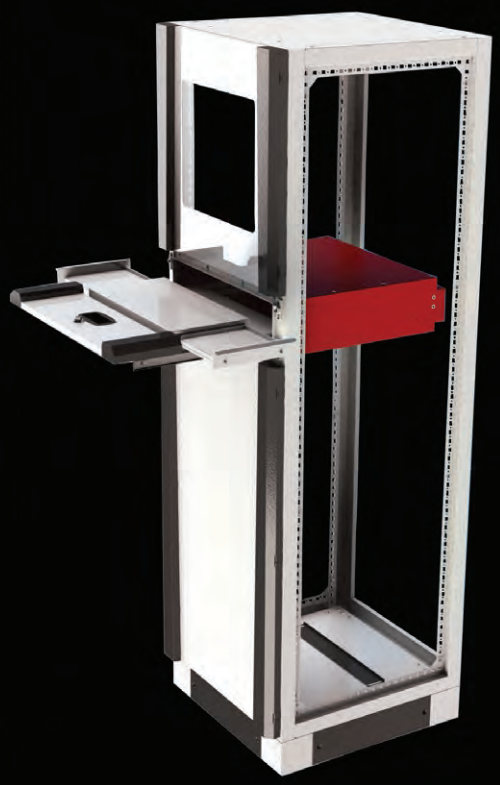

- Closed-system keyboard and mouse
- No dust-holding when keyboard and mouse used.
- Please see page 290 for technical drawings.

PC CABINET

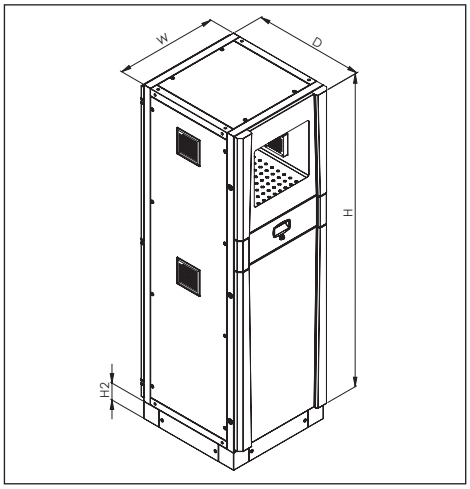

Material : Completely steel material : 1,50 mm mild steel + RAL 7035 coating
Front frame : RAL 9005 coating
Glass : 4 mm tempered glass

IP Rate : IP 55

Supply includes : 1 pcs body, openable back door, 2 pcs partial front doors, sliding keyboard part, 2 pcs fixed shelf, H100mm plinth, gland plate with foam, 4 pcs filters.

PRODUCT CODE	PC CABINET WIDTH (W)	PC CABINET HEIGHT (H+H2)	PC CABINET DEPTH (D)
406.186	600	1800+100	600
406.188	600	1800+100	800

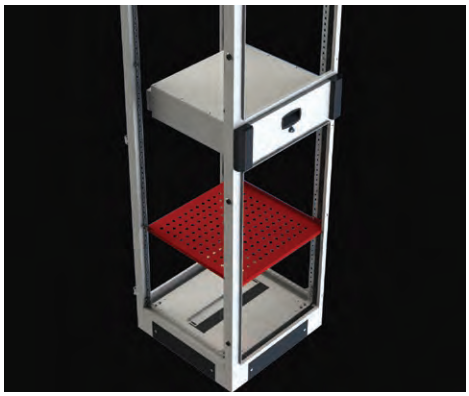

FIXED SHELF

Material : 1,50 mm mild steel + RAL 7035 coating

Supply includes : 1 pcs fixed shelf and screws

PRODUCT CODE	PC CABINET WIDTH (W)	PC CABINET DEPTH (D)
941.266	600	600
941.268	600	800

MOVABLE SHELF

Material : 1,50 mm mild steel + RAL 7035 coating

Supply includes : 1 pcs shelf rail

PRODUCT CODE	PC CABINET WIDTH (W)	PC CABINET DEPTH (D)
941.306	600	600
941.308	600	800

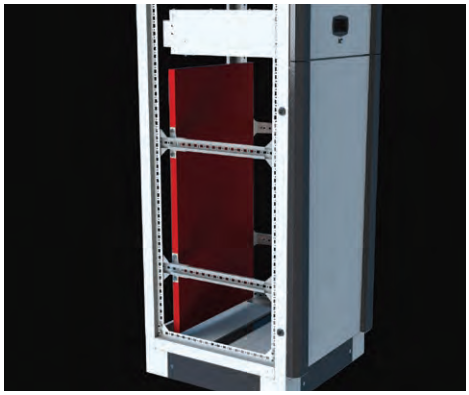

MOUNTING PLATE

Material : 2 mm Galvanized steel

Supply includes : 1 pcs mounting plate

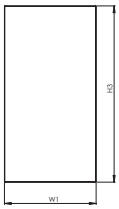

PRODUCT CODE	PLATE WIDTH (W1)	PLATE HEIGHT (H3)
942.308	490	585
942.310	490	940

Enjoy uninterrupted energy
in every area requiring
hygiene and meticulousness
with Tekpan stainless enclosures.

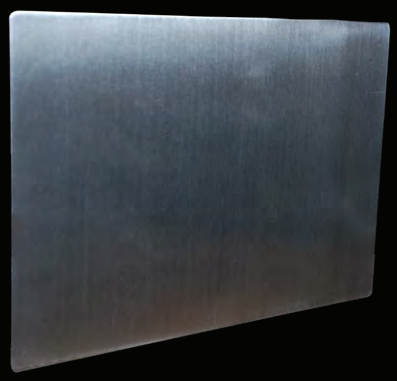

NATURAL SURFACE APPLICATION

- Standard application
- Standard AISI 304 (1.4031) stainless steel.
- Suitable surface process: 140 grain
- AISI 316 (1.4401) stainless steel can also be used.
- Coating can be applied on material.

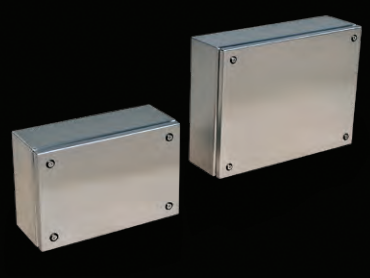

KT TERMINAL BOXES 204

DM WALL-MOUNTED ENCLOSURES 205

DT FLOOR STANDING ENCLOSURES 206

KMT CONTROL DESKS 209

KT STAINLESS STEEL TERMINAL BOXES

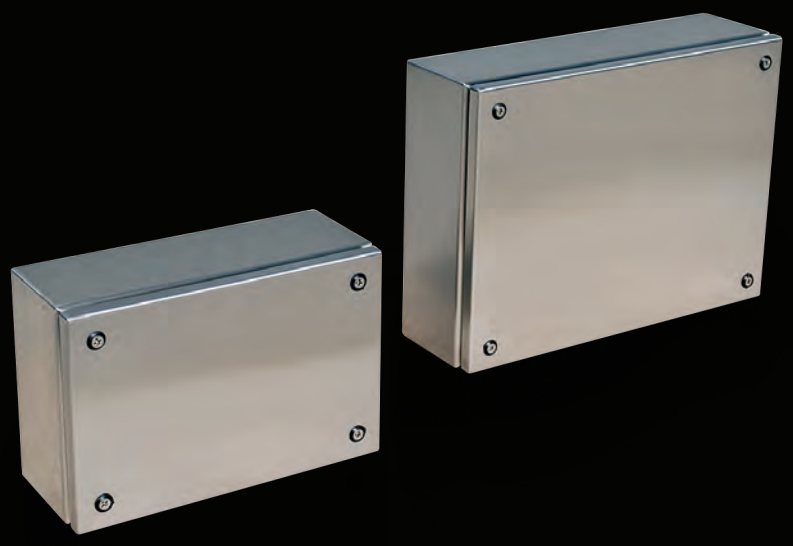

Material : All steel sheets: 1,50 mm quality 304 stainless steel

Surface process : Natural stainless-steel surface application

IP Rate : IP 66

Supply includes : 1 pcs body,1 pcs screwed lid, 4 pcs wall brackets and assembly parts

- Please contact the customer service for quality 316 steel sheet application or varnish-coated process.
- Please see page 283 for technical drawings.

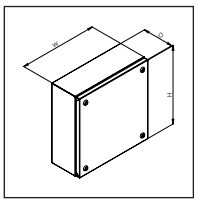

PRODUCT CODE	MOUINTING PLATE PRODUCT CODE	ENCLOSURE SIZES		
		WIDTH (W) (mm)	HEIGHT (H) (mm)	DEPTH (D) (mm)
312.212.K	942.122	200	200	120
313.212.K	942.132	300	200	120
313.312.K	942.133	300	300	120
314.212.K	942.142	400	200	120
314.312.K	942.143	400	300	120
314.412.K	942.144	400	400	120

ACCESSSORIES:

Mounting Plate Application

Material : 2.00 mm galvanized steel

Supply includes : 1 pcs mounting plate and assembly parts.

ATTENTION : Mounting plate should be ordered separately as per above table.

DM STAINLESS STEEL WALL-MOUNTED ENCLOSURES

Material : Body: 1,50 mm, 304 stainless steel
Door: 1,50 mm-2,00 mm stainless steel
Mounting plate: 2,00 mm Galvanized steel

Surface process : Natural stainless steel surface application

IP Protection : Single door: IP 65
Double door: IP54

Supply includes : 1 pcs body, 1 pcs door, 1 pcs mounting plate, 1 pcs gland plate, 4 pcs stainless steel wall brackets

- Please see page 284 for technical drawings.
- Please contact the customer service for 316 steel sheet application or varnish-coated surface process.

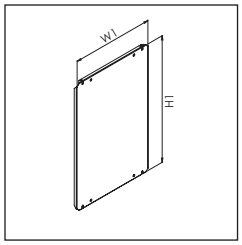

Mounting plate

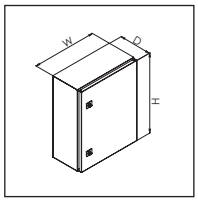

Version 1

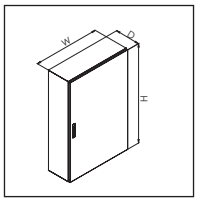

Version 2

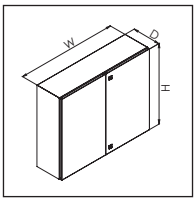

Version 3

			DM ENCLOSURE SIZES (mm)			MOUNTING PLATE	
PRODUCT CODE	VERSION	LOCK QTY	WIDTH (W) (mm)	HEIGHT (H) (mm)	DEPTH (D) (mm)	W1	H1
213.415.K	1	1	300	400	150	250	340
213.420.K	1	1	300	400	200	250	340
214.520.K	1	2	400	500	200	350	440
214.620.K	1	2	400	600	200	350	540
214.630.K	1	2	400	600	280	350	540
215.720.K	1	2	500	700	200	450	640
215.730.K	1	2	500	700	280	450	640
216.820.K	1	2	600	800	200	550	740
216.830.K	1	2	600	800	280	550	740
216.030.K	1	2	600	1000	280	550	940
216.230.K	2	---	600	1150	280	550	1090
218.030.K	1	2	800	1000	280	750	940
218.230.K	2	---	800	1150	280	750	1090
210.030.K	3	---	1000	1000	280	950	940

DT FLOOR STANDING STAINLESS STEEL CABINET

Material : Body : 1,50 mm 304 stainless steel.
Door: 2,00 mm 304 stainless steel.
Rear panel: 1,50 mm 304 stainless steel.
Top cover: 1,50 mm 304 stainless steel.
Plinth corners: 2,00 mm 304 stainless steel.
Plinth panels: 1,50 mm 304 stainless steel.
Gland Plate: 1,50 mm 304 stainless steel.

Surface process : Natural stainless surface process

IP Rate : IP 55 Single Door, IP54 Double Door

Supply includes : 1 set of panel body, 1 pcs door, 1 pcs rear panel,
1 pcs top cover, 1 set of gland plate,
1 set of enclosure combination kit,
4 pcs lifting hook.

- Please see page 285-286 for technical drawings.
- Please contact the customer service for 316 stainless steel application or varnish-coated surface process.

ATTENTION : Mounting plate and other interior equipments chosen separately Page 207 - 208

DT FLOOR STANDING STAINLESS STEEL CABINET

ASSEMBLED DT STAINLESS STEEL ENCLOSURE

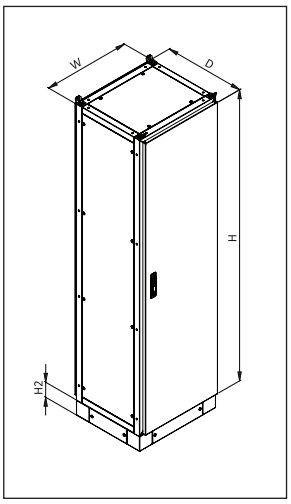

PRODUCT CODE	DOOR	MOUINTING PLATE PRODUCT CODE	DT ENCLOSURE SIZES (mm)		
			WIDTH (W) (mm)	HEIGHT (H) (mm)	DEPTH (D) (mm)
136.184.K	SINGLE	942.618	600	1800	400
136.185.K	SINGLE	942.618	600	1800	500
136.186.K	SINGLE	942.618	600	1800	600
136.188.K	SINGLE	942.618	600	1800	800
136.204.K	SINGLE	942.620	600	2000	400
136.205.K	SINGLE	942.620	600	2000	500
136.206.K	SINGLE	942.620	600	2000	600
136.208.K	SINGLE	942.620	600	2000	800
138.184.K	SINGLE	942.818	800	1800	400
138.185.K	SINGLE	942.818	800	1800	500
138.186.K	SINGLE	942.818	800	1800	600
138.188.K	SINGLE	942.818	800	1800	800
138.204.K	SINGLE	942.820	800	2000	400
138.205.K	SINGLE	942.820	800	2000	500
138.206.K	SINGLE	942.820	800	2000	600
138.208.K	SINGLE	942.820	800	2000	800
130.184.K	DOUBLE	942.018	1000	1800	400
130.185.K	DOUBLE	942.018	1000	1800	500
130.186.K	DOUBLE	942.018	1000	1800	600
130.188.K	DOUBLE	942.018	1000	1800	800
130.204.K	DOUBLE	942.020	1000	2000	400
130.205.K	DOUBLE	942.020	1000	2000	500
130.206.K	DOUBLE	942.020	1000	2000	600
130.208.K	DOUBLE	942.020	1000	2000	800
132.184.K	DOUBLE	942.218	1200	1800	400
132.185.K	DOUBLE	942.218	1200	1800	500
132.186.K	DOUBLE	942.218	1200	1800	600
132.188.K	DOUBLE	942.218	1200	1800	800
132.204.K	DOUBLE	942.220	1200	2000	400
132.205.K	DOUBLE	942.220	1200	2000	500
132.206.K	DOUBLE	942.220	1200	2000	600
132.208.K	DOUBLE	942.220	1200	2000	800

DT FLOOR STANDING STAINLESS STEEL CABINET

DT STAINLESS STEEL PLINTH

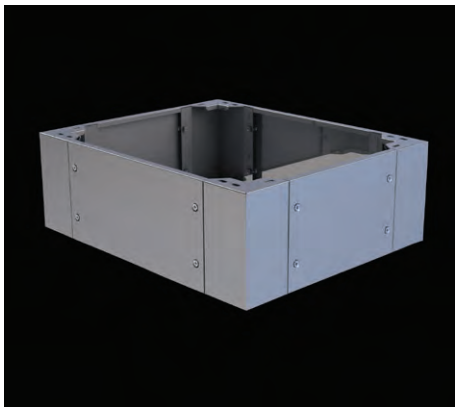

Material : Plinth corners: 2,00 mm 304 stainless steel
Plinth panels: 1,50 mm 304 stainless steel

Supply includes : 4 pcs support corner, 2 pcs front plinth panel, 2 pcs side plinth panel

H100 PRODUCT CODE	H200 PRODUCT CODE	DT ENCLOSURE WIDTH (mm)	DT ENCLOSURE DEPTH (mm)
911.164.K	911.264.K	600	400
911.165.K	911.265.K	600	500
911.166.K	911.266.K	600	600
911.168.K	911.268.K	600	800
911.184.K	911.284.K	800	400
911.185.K	911.285.K	800	500
911.186.K	911.286.K	800	600
911.188.K	911.288.K	800	800
911.104.K	911.204.K	1000	400
911.105.K	911.205.K	1000	500
911.106.K	911.206.K	1000	600
911.108.K	911.208.K	1000	800
911.124.K	911.224.K	1200	400
911.125.K	911.225.K	1200	500
911.126.K	911.226.K	1200	600
911.128.K	911.228.K	1200	800

DT STAINLESS STEEL SIDE PANEL

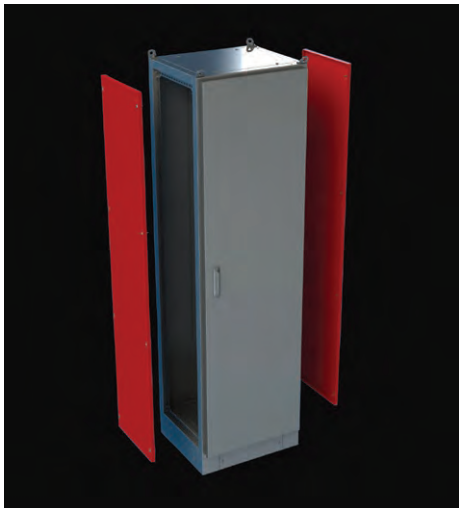

Material : 1,50 mm 304 stainless steel

Supply includes : 2 pcs side panel (1 pair)

PRODUCT CODE	DT ENCLOSURE HEIGHT (mm)	DT ENCLOSURE DEPTH (mm)
932.418.K	1800	400
932.518.K	1800	500
932.618.K	1800	600
932.818.K	1800	800
932.420.K	2000	400
932.520.K	2000	500
932.620.K	2000	600
932.820.K	2000	800

KMT-1000 AND KMT-2000 STAINLESS CONTROL DESKS

Material : Body, panels: 1,50 mm 304 stainless steel
Plinth corner: 2,00 mm 304 stainless steel
Bottom panel: 1,50 mm 304 stainless steel
Mounting panel: 2,00 mm galvanized steel

Surface process : Natural stainless surface application

IP Rate : IP 55

Supply includes :

For KMT-1000: 1 pcs back-closed main body, 1 pcs top panel with damper, 1 pcs bottom door, gland plate with foam, 1 pcs mounting plate, 1 set of 100mm plinth

For KMT-2000: 1 pcs open-back main body, 1 pcs top panel with damper, 1 pcs bottom door, 1 pcs rear door, gland plate with foam, 2 pcs mounting plate.

- Please contact the customer service for 316 steel sheet application or varnish-coated surface process.
- Please see page 287-288 for technical drawings.

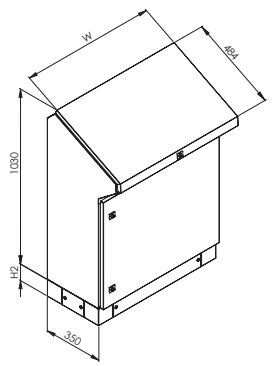

KMT-1000 (Closed rear)

PRODUCT CODE	ENCLOSURE WIDTH (mm)	DOOR TYPE
516.350.K	600	SINGLE
518.350.K	800	SINGLE
510.350.K	1000	DOUBLE
512.350.K	1200	DOUBLE

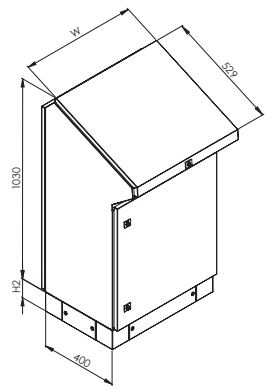

KMT-2000 (Opened rear)

PRODUCT CODE	ENCLOSURE WIDTH (mm)	DOOR TYPE
526.400.K	600	SINGLE FRONT + SINGLE REAR
528.400.K	800	SINGLE FRONT + SINGLE REAR
520.400.K	1000	DOUBLE FRONT + DOUBLE REAR
522.400.K	1200	DOUBLE FRONT + DOUBLE REAR

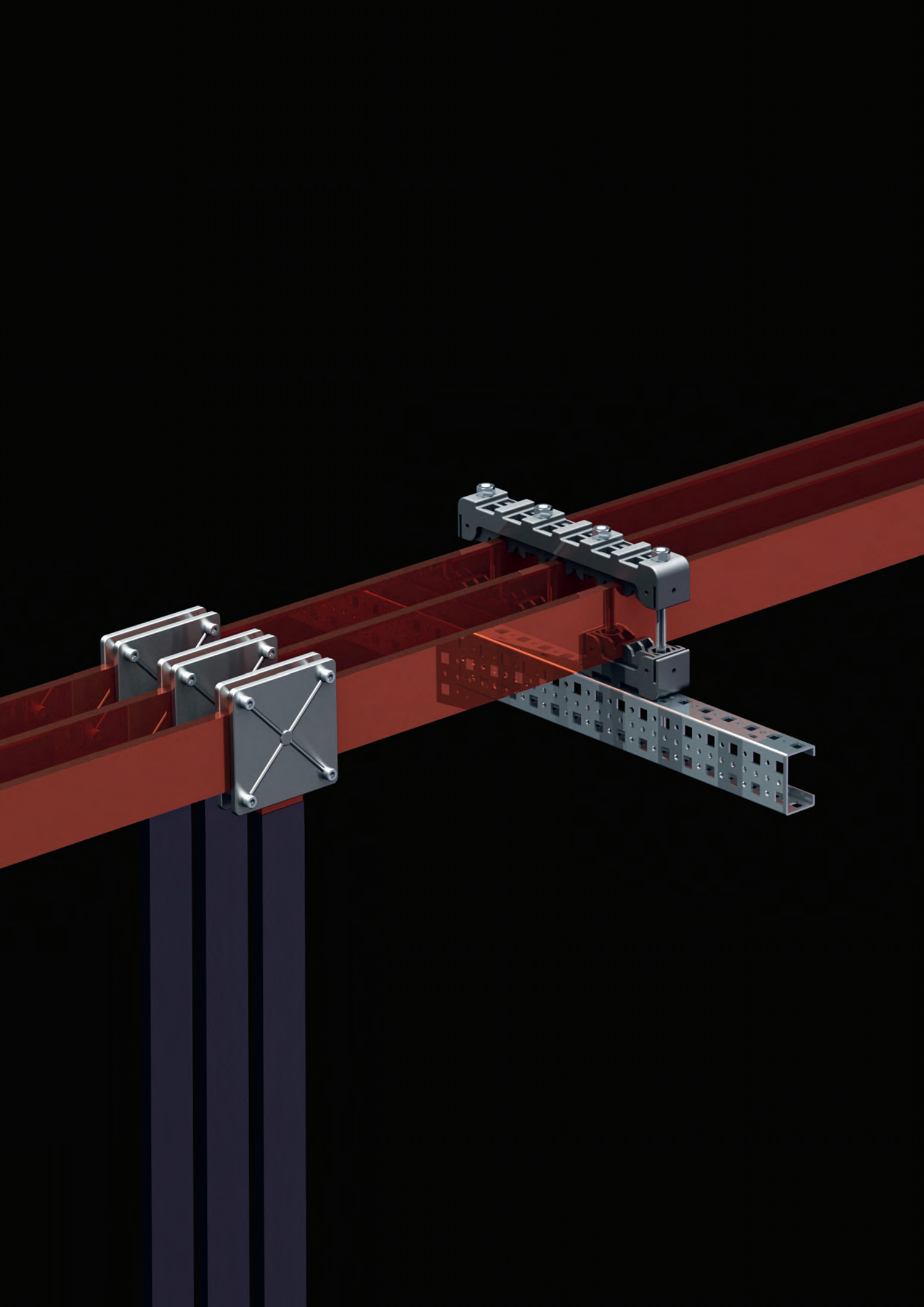

ADJUSTABLE BUSBAR SUPPORT 212

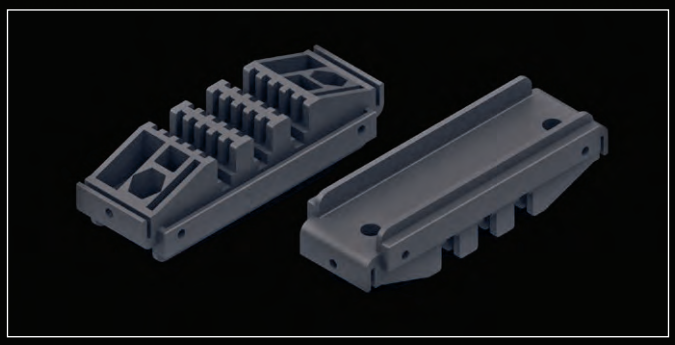

ADJUSTABLE BUSBAR SUPPORT (METAL SUPPORTED) 214

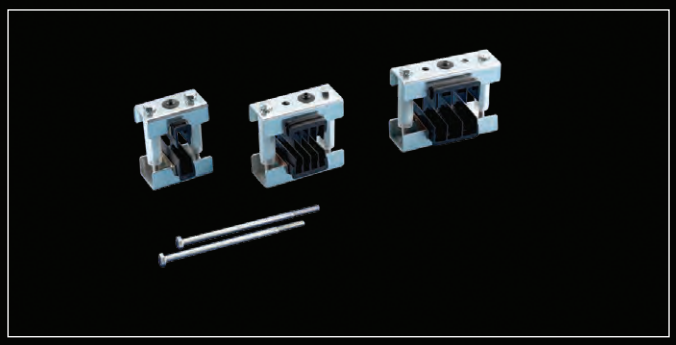

ADJUSTABLE, FLAT BUSBAR SUPPORTS 215

COMPACT BUSBAR 216

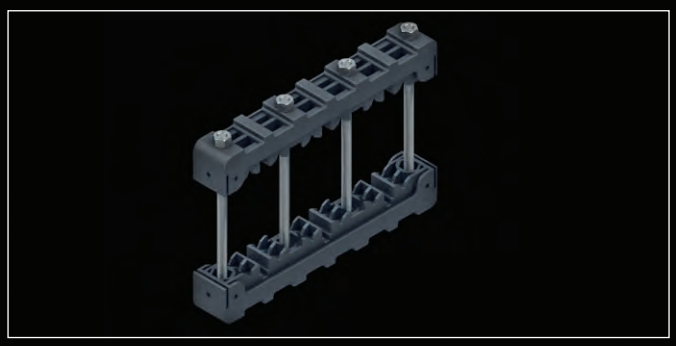

PLUG-IN COMPACT BUSBARS 218

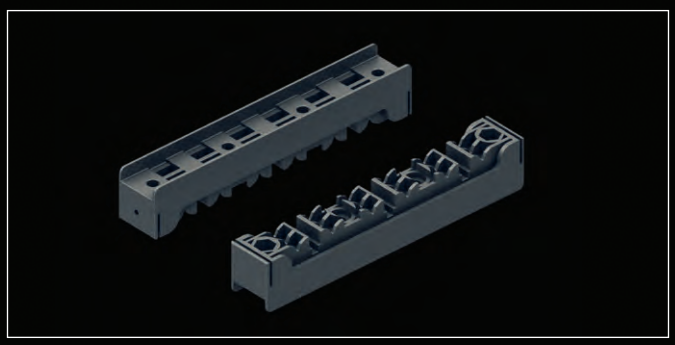

FLEXIBLE COPPER BUSBAR 220

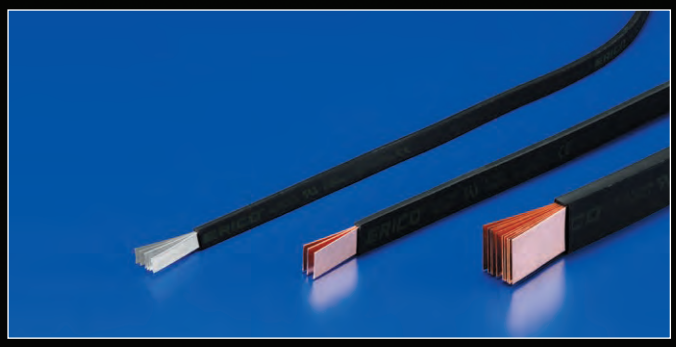

FLEXIBLE BUSBAR BRACKETS 221

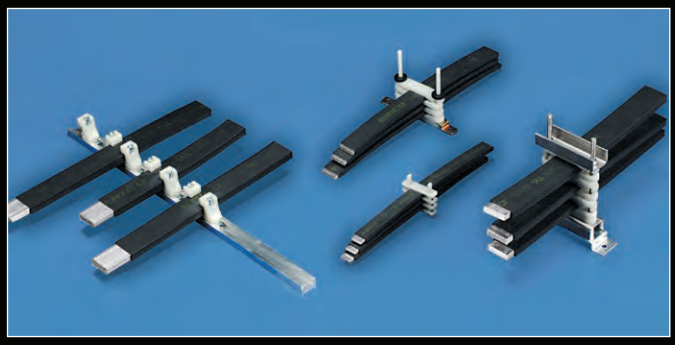

BUSBAR BRACKETS 222

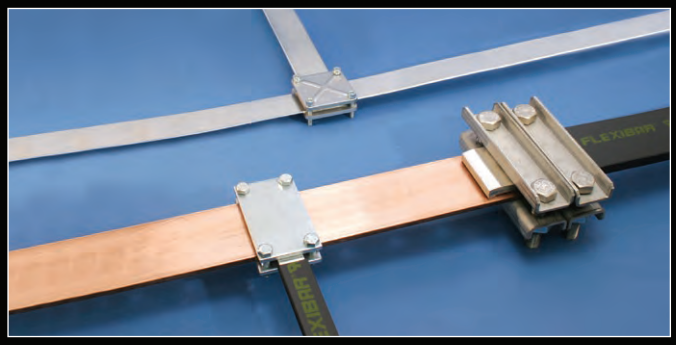

ADJUSTABLE BUSBAR SUPPORT

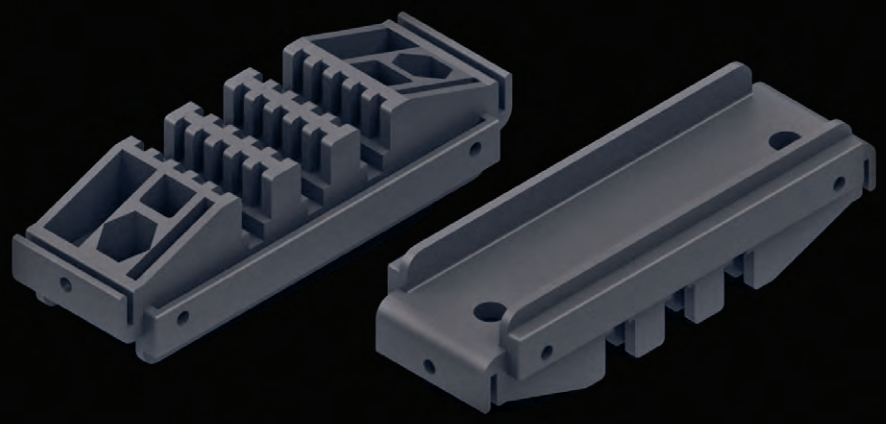

Material : Fibre-reinforced polyamid.

Supply includes : 2 pcs busbar support and combination screws.

Product Code : Plug in type: **600.001 (1 set: 2 pcs)**
Open type : **600.101 (1 set: 2 pcs)**

- Please see page 213 for application modes.

- Distance between the busbar supports can be adjusted with 25mm steps.
- Easy mounting.
- Cost-effective solution.
- Operating range between -40oC and +130oC.
- Halogen-free.
- Fire protection in line UL 94 VO standard.
- Applicable to 5-10mm busbar cross-sections.
- Applicable to 30-120mm busbar sizes.
- Used in applications between 400A-4500A.
- 3 pcs flat copper application.

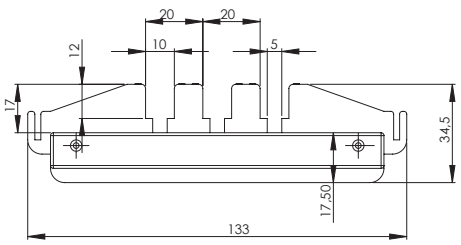

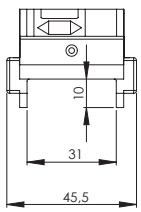

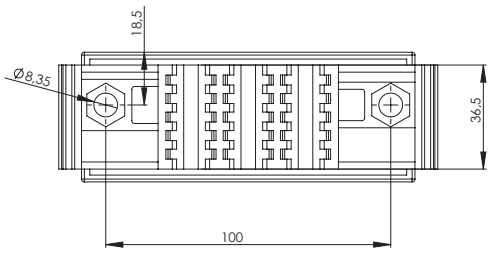

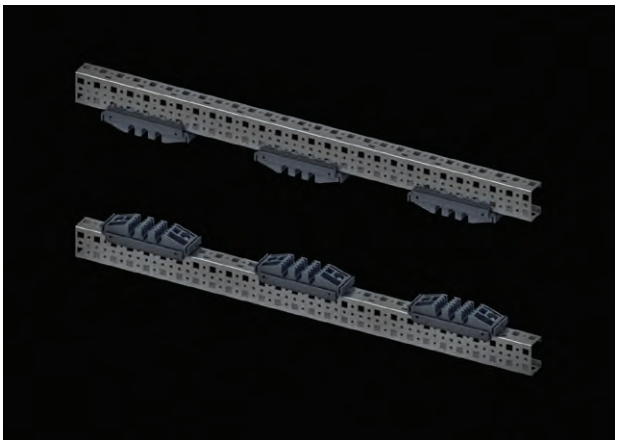

ADJUSTABLE BUSBAR SUPPORT

APPLICATION - 1

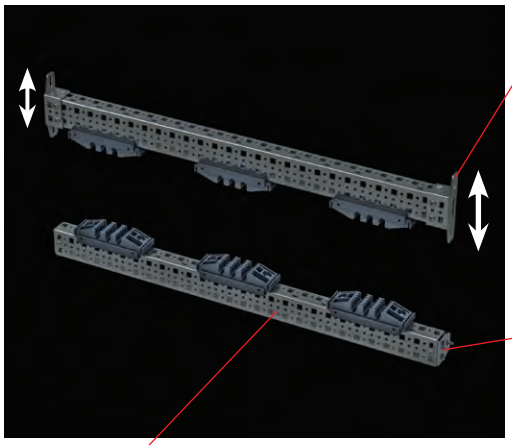

Adjustable Rail Bracket, Type T, page 170

Plug-in Rail Bracket, page 169

50x25 Scissile Rail page 167

APPLICATION - 2

APPLICATION - 3

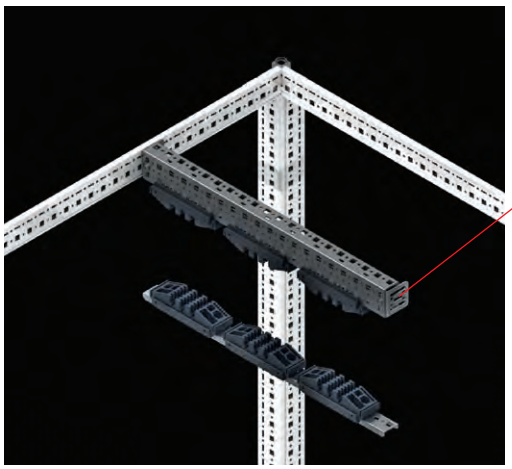

Adjustable Rail Bracket, Type L, page 171

APPLICATION - 4

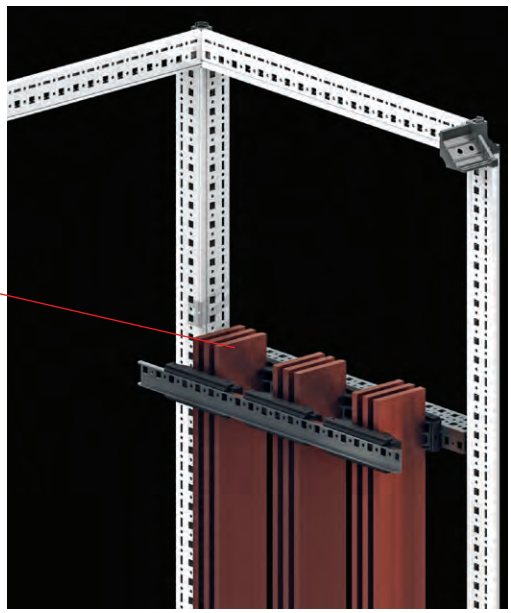

Adjustable Rail Bracket, Type L, page 171

ADJUSTABLE BUSBAR SUPPORT (METAL SUPPORTED)

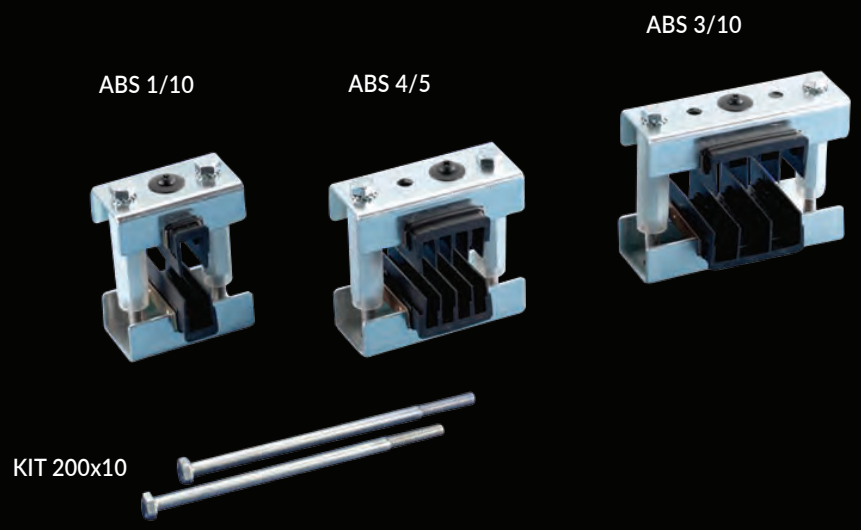

ERICO

Material : Polyamide, glass fibre reinforced
Supply Includes : 1 set (2 pcs)

- Distance between the busbar supports can be adjusted with 25mm steps.
- Durable structure
- Operating range between -40°C and + 130°C
- Halogen-free
- Fire protection in line UL 94 VO standard.
- Applicable to 5-10mm busbar cross-sections
- Applicable to 50-200mm busbar sizes.
- 7400A °C damage can be applied.

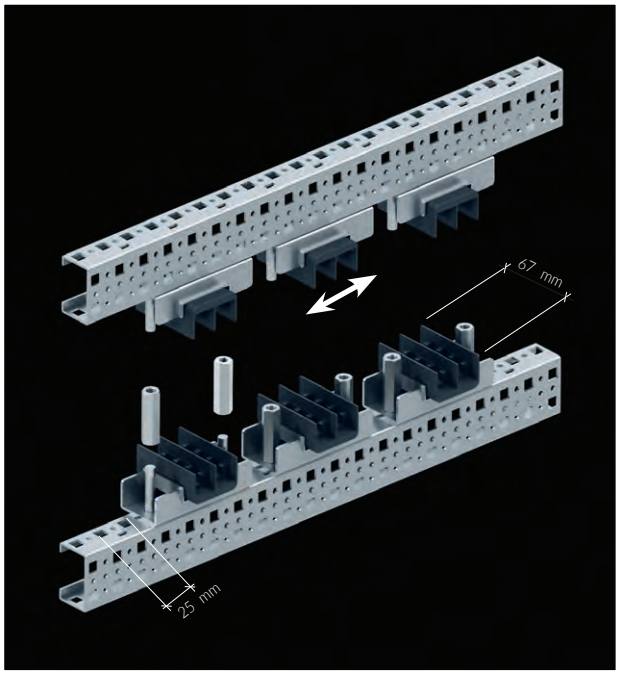

PRODUCT CODE	FLAT BAR QTY	BUSBAR THICKNESS (mm)
560.860	1	5
560.870	4	5
560.880	1	10
560.890	2	10
560.900	3	10
ASSEMBLING KIT		
560.910	160x10 KIT	
560.920	200x10 KIT	

ADJUSTABLE, FLAT BUSBAR SUPPORTS

Product Code : **504.991** (12 pcs pack of)
Material : Polyamide, glass fibre reinforced

- Distance between the phases can be adjusted.
- Enables easy mounting.
- High resistance to short current power.
- Operating range between -40°C and -130°C
- Fire protection in line with UL 94 VO standard.
- Applicable to 5-10mm busbar cross-sections
- Copper busbar has flexibility.
- Application up till 2300A.

Heavy equipment profile, page 168

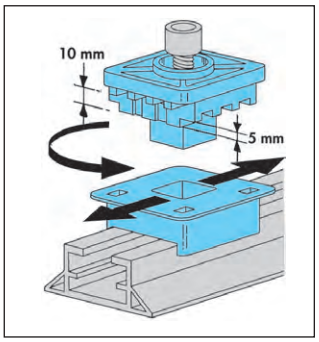

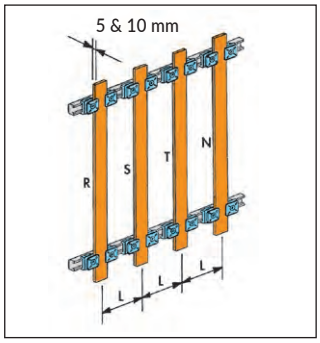

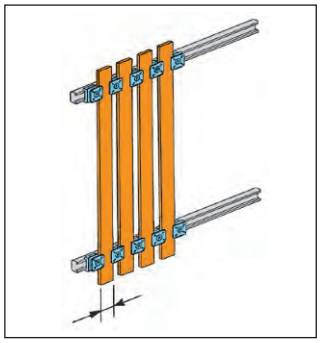

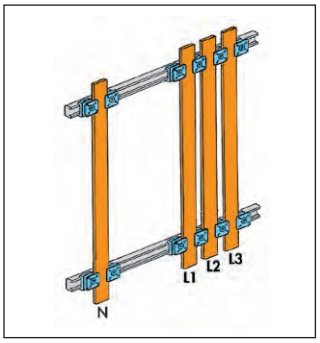

COMPACT BUSBAR SUPPORT

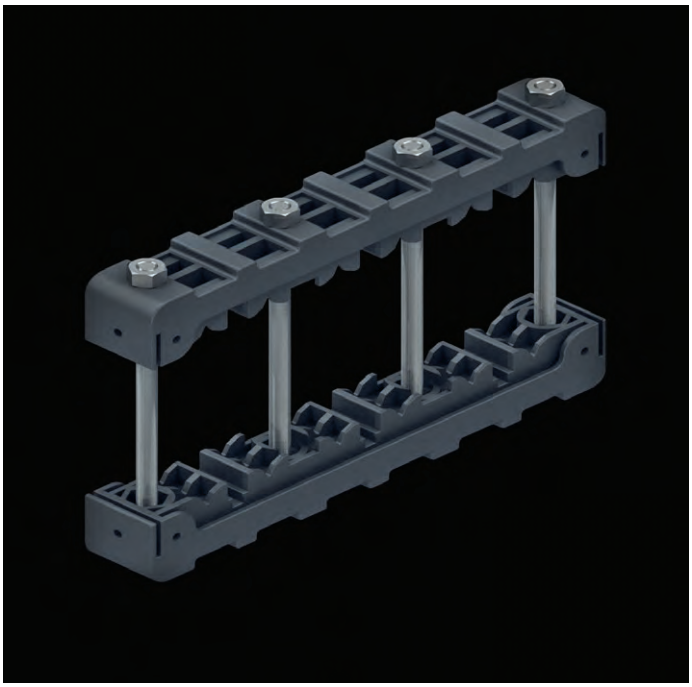

Material : Polyamide glass fibre reinforced.

Supply Includes : 2 pcs busbar support and combination screws.

Product Code : **600.002** (1 set: 2 psc)

- The busbar supports can be adjusted with 25mm steps.
- Easy mounting
- Cost-effective solution

- Operating range between -40 oC and + 130 oC
- Halogen-free
- Fire protection in line with UL 94 VO standard.
- 4 screw fastening.
- Applicable to 5-10mm busbar cross-sections.
- Applicable to size 25-120 mm busbar.
- Can be used in applications between 250 A - 1600 A.
- Suitable for 3 phase application.

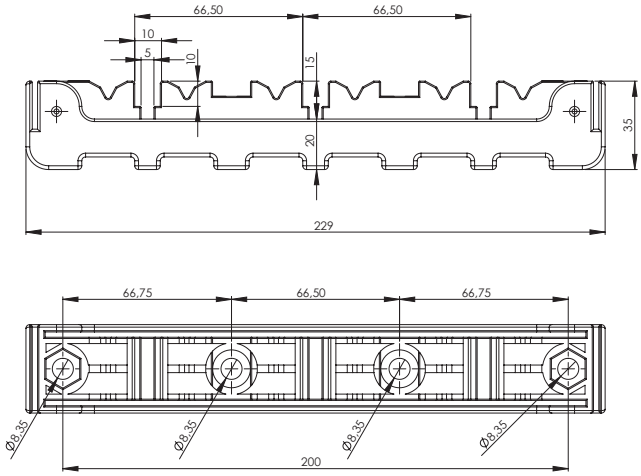

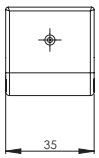

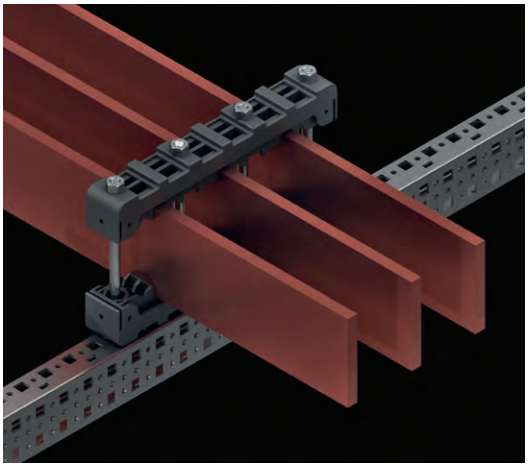

COMPACT BUSBAR SUPPORT

APPLICATION - 1

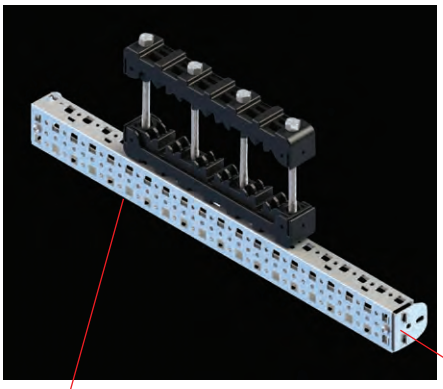

Plug-in Rail Bracket, page 169

50x25 Scissile Rail page 167

APPLICATION - 2

Adjustable Rail Bracket, Type T, page 170

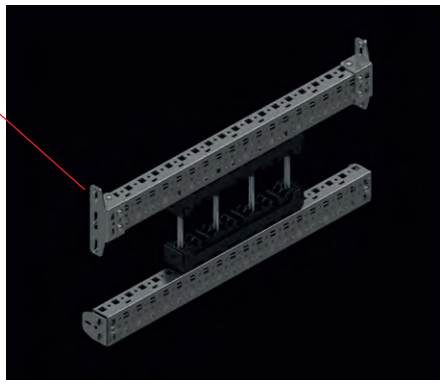

APPLICATION -3

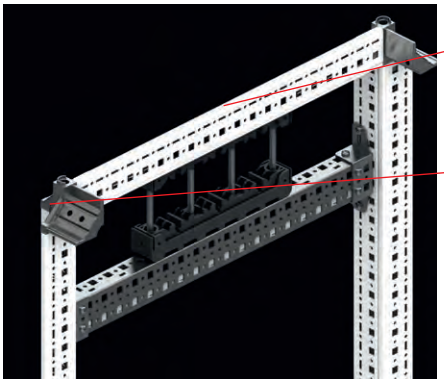

M6 Hide Nut Page 259

Adjustable Rail Bracket, Type T, page 170

APPLICATION - 4

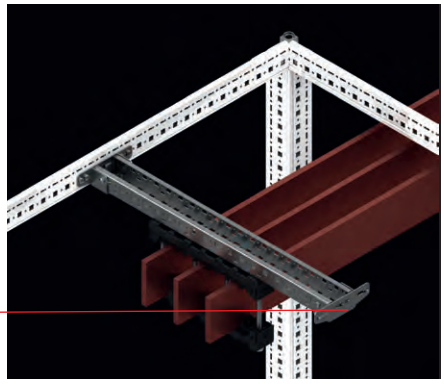

Adjustable Rail Bracket, Type T, page 170

APPLICATION - 5

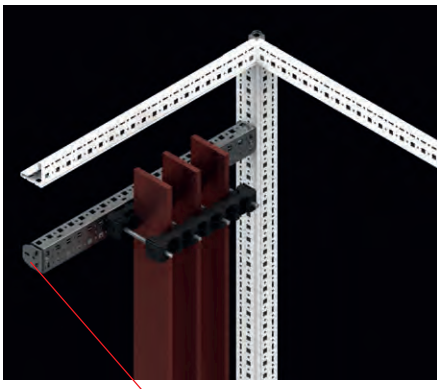

Plug-in Rail Bracket page 169

APPLICATION - 6

Adjustable Rail Bracket, Type L, page 171

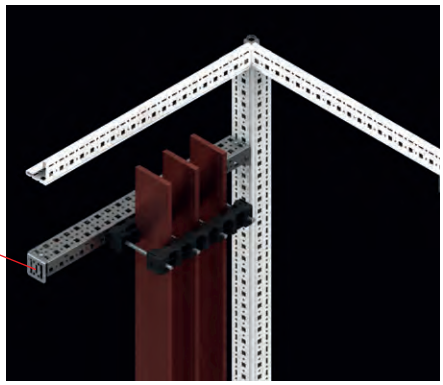

FLEXIBLE COPPER BUSBARS

ERIFLEX®

ERICO®

Skin Effect

Comparison of the penetration depth between:

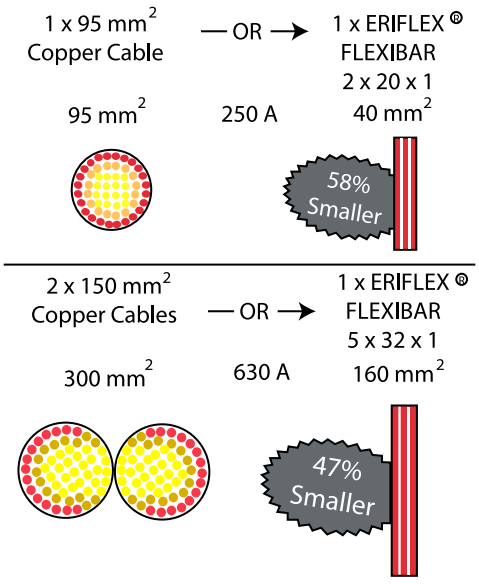

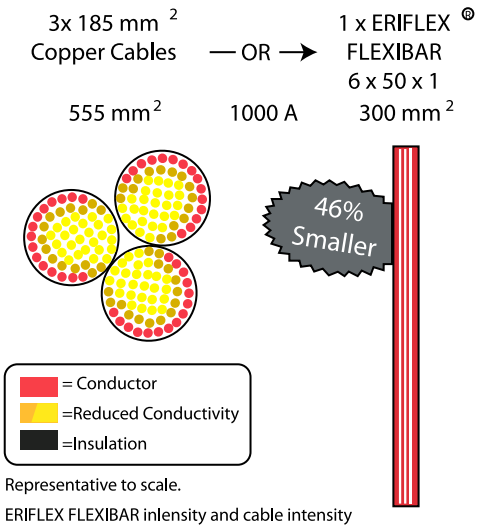

Representative to scale.
ERIFLEX FLEXIBAR inlensity and cable intensity are bassed on conductor temperature rise of 50 C°.

- Made from electrolyte conductive copper.
- Highly-protected support.Made from self-extinguishing PVC or silicon composition.
- Maximum bending and turning.
- Operating range between -25 Co and +150 Co.
- High flexibility: 370%
- Nominal Voltage: 1000V AC/ 1500 V DC

FLEXIBLE COPPER BUSBARS

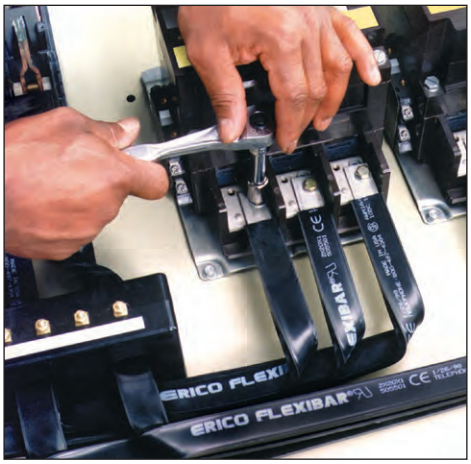

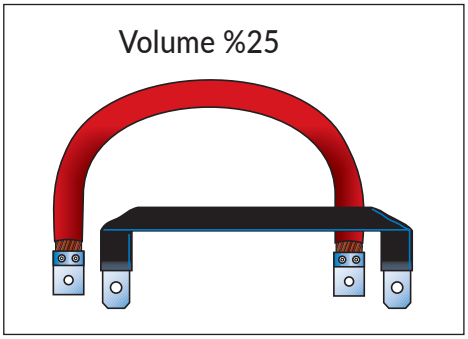

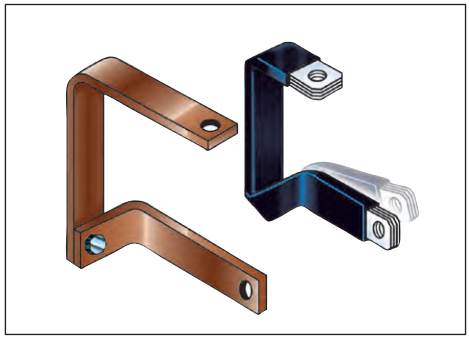

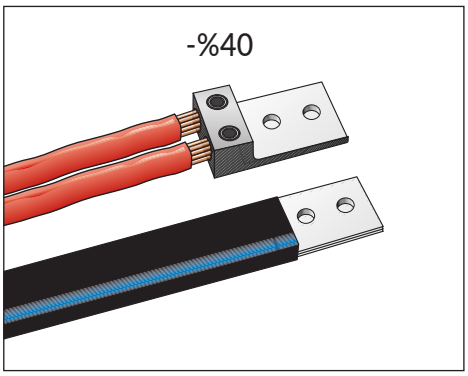

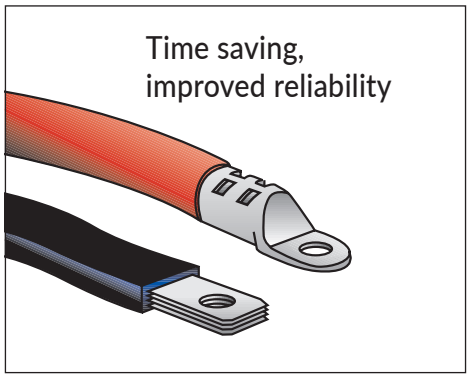

ERICO

SELECTION OF ERIFLEX FLEXIBAR ACCORDING TO THE INTERNAL TEMPERATURE OF THE PANEL

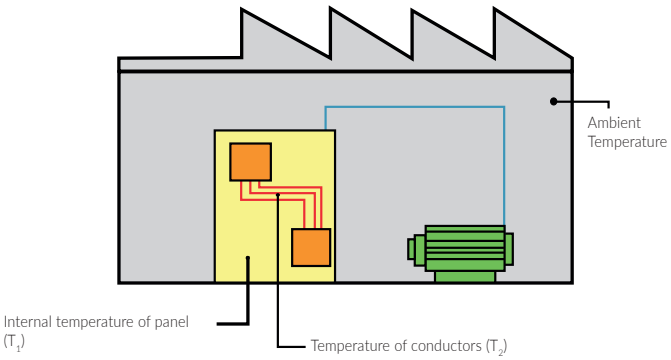

Temperature rise of conductor = T_2 - T_1 = ΔT (K)

Ex.: For a current of 630 A, with

T_1 = 40°C - T2 = 90°C

1) ΔT = 90 - 40 = 50 K

2) In the 50°C column, find the closest current value to 630A.
ERIFLEX FLEXIBAR 5 x 32 x 1 - 552650 - 160 mm² - 640A

3) Select ERIFLEX FLEXIBAR according to the terminal width of the equipment being connected.

ADMISSIBLE CURRENTS : This table indicates the temprature rise produced by choosen current in the given section. This calculation does not take into account the heat dissipation from the switch gear.

A	PRODUCT CODE	UNIT METER	PACKS OF	N	A	B	SECTION mm²	ΔT (K) 70	60	50	40	30	20	CURRENT COEFFICIENT	
250A	552.490	2	5	2	20	1	40	326	300	275	246	214	174	1.72	2.25
	552.500	2	5	3	20	1	60	428	395	360	323	280	228	1.72	2.25
400A	552.520	2	5	5	20	1	100	498	460	420	376	326	266	1.72	2.25
	552.530	2	5	6	20	1	120	546	506	462	413	358	292	1.72	2.25
500A	552.580	2	5	5	24	1	120	608	563	514	460	398	325	1.72	2.25
	552.590	2	5	6	24	1	144	670	620	566	506	438	358	1.72	2.25
630A	552.650	2	5	5	32	1	160	758	702	640	573	496	405	1.72	2.25
	552.660	2	5	6	32	1	192	846	783	715	640	555	452	1.72	2.25
800A	552.730	2	5	6	40	1	240	1018	943	860	770	667	544	1.72	2.25
1000A	552.740	2	5	8	40	1	320	1230	1140	1040	930	805	658	1.72	2.25
	552.750	2	5	10	40	1	400	1400	1295	1181	1055	915	747	1.72	2.25
1250A	552.810	2	2	10	50	1	500	1650	1525	1395	1245	1080	882	1.72	2.25
1600A	552.870	2	2	10	63	1	630	1895	1755	1600	1435	1240	1012	1.65	2.12
	552.920	2	2	8	80	1	640	1895	1755	1600	1435	1240	1012	1.65	2.12
	552.930	2	2	10	80	1	800	2100	1945	1775	1585	1375	1123	1.65	2.12
	552.990	2	2	12	100	1	1200	2500	2315	2115	1890	1636	1338	1.6	2.02

When using 2 or 3 busbar in parallel, use the coefficient:

Example : 5 x 32 x 1 - ΔT = 50 K: 640 A
2 parallel bars > 640A x 1,72 = 1100A
3 parellel bars > 640A x 2,25 = 1440A

FLEXIBLE COPPER BUSBARS

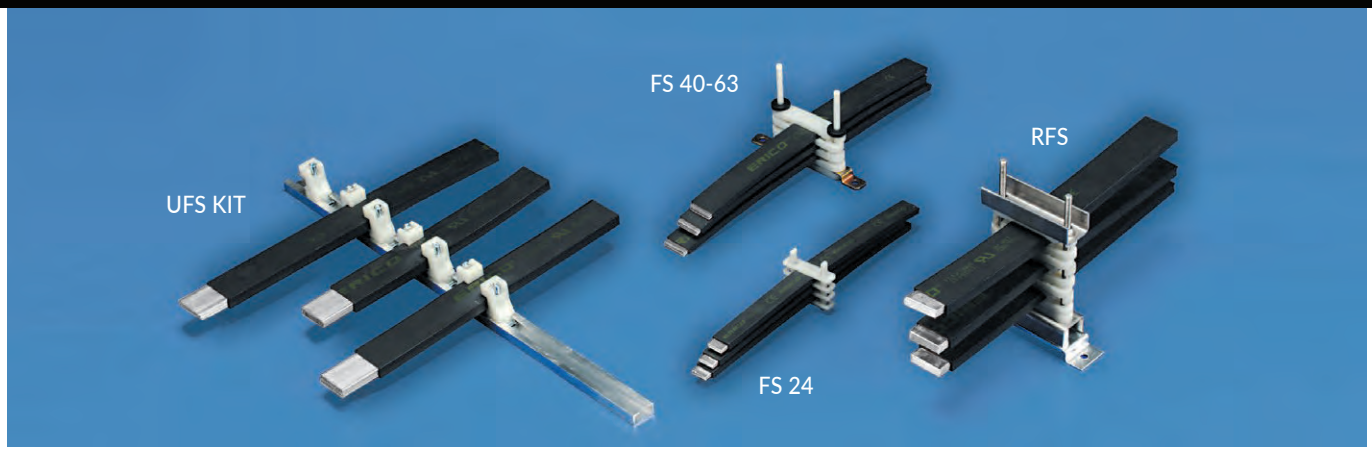

ERICO

UFS KIT

- Bracket for flexible busbars.
- 2mm aliminium profile and 24 pcs bracket.
- Made from glass-fibre-reinforced, non-halogen polyamid
- Product Code: 553.590

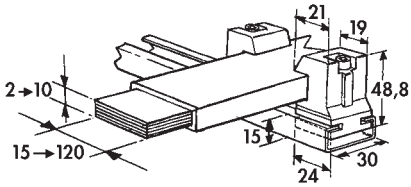

FS SPACER CLAMP

- Holds flexible busbars evenly and in parallel position.
- Sufficient number of perforations for optimum cooling.
- 4 pcs flexible busbar can be held together.

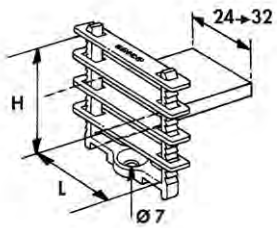

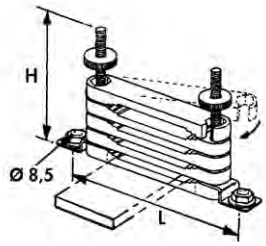

PRODUCT CODE	DESCRIPTION	FLEXIBLE BUSBAR TYPE	H (mm)	L (mm)	PACKS OF
553.550	FS 24	=< 24mm	53	30	25
553.560	FS 32	=< 32mm	53	38	25
553.570	FS 40-63	40,50,63mm	95	150	10
553.580	FS 80-100	80/100mm	140	200	10

RFS SUPPORT

- Can hold 8 pcs busbar in parallel position.
- Can be mounted with 25mm steps on the plate.
- Recommended distance between the brackets: 400 mm

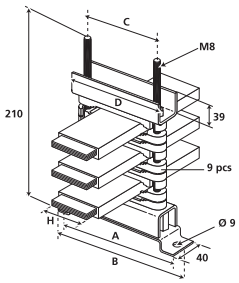

PRODUCT CODE	DESCRIPTION	FLEXIBLE BUSBAR TYPE	A (mm)	B (mm)	C (mm)	D (mm)	PACKS OF
553.370	RFS 40-63	40,50,63mm	150	175	90	120	1
553.380	RFS 80-100	80/100mm	200	225	140	170	1

BUSBAR BRACKETS

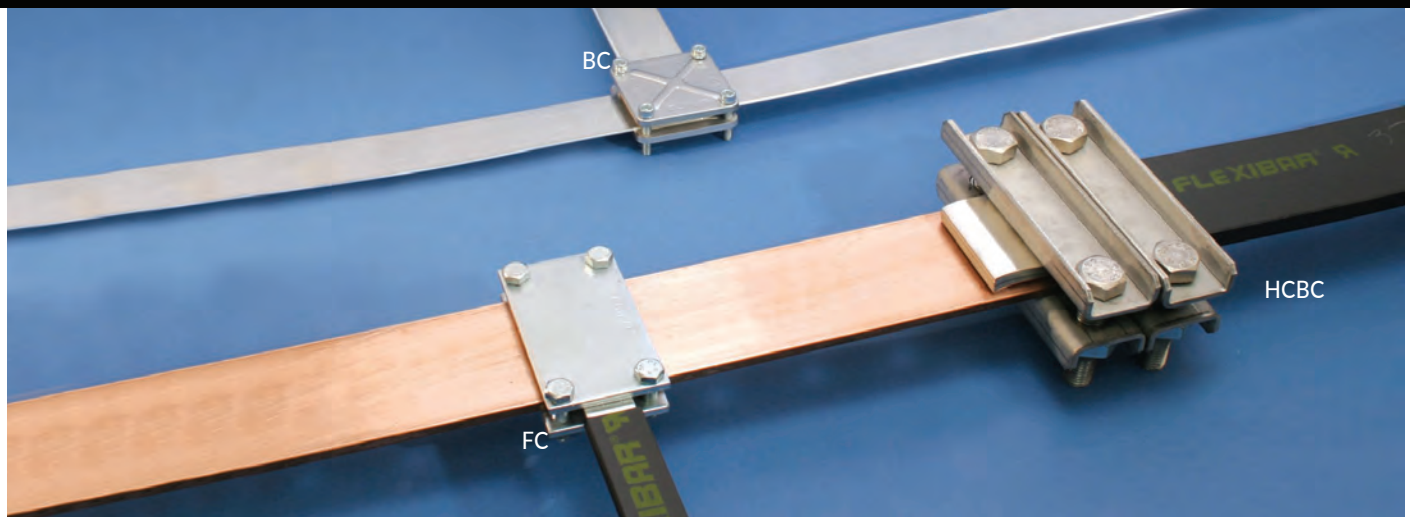

FC BUSBAR CLAMP

- Holding capacity: 20mm
- 2 pcs mild steel+ zinc-plating part tightened with 8.8 quality M8 screws.

PRODUCT CODE	DESCRIPTION	A (mm)	B (mm)	C (mm)	D (mm)	E (mm)	F (mm)	PACKS OF
553.020	FC 50 x24	50	20-24	60	36	75	52	3
553.030	FC 50 x32	50	32	60	44	75	60	3
553.040	FC 50 x40	50	40	60	52	75	68	3
553.050	FC 80 x24	80	20-24	90	36	105	52	3
553.060	FC 80 x32	80	32	90	44	105	60	3
553.070	FC 80 x50	80	50	90	62	105	78	3
568.700	FC 100 x32	100	32	110	44	125	60	3
568.730	FC 120 x32	120	32	130	44	145	60	3

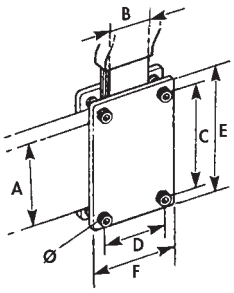

BC RIBBED - STEEL BUSBAR CLAMP

- Holding capacity: 20mm
- 2 pcs zinc-plated, reinforced steel sheet effectively tightened with the help of grooves.
- You can increase the copper connection, holding height up to 50 mm by using different size bolts.

PRODUCT CODE	DESCRIPTION	A (mm)	B (mm)	C (mm)	DIAMETER	PACKS OF
553.200	BC 30	56	42	30	M6	8
553.210	BC 40	66	52	40	M6	8
553.220	BC 50	83	64	50	M8	8
553.230	BC 63	93	74	63	M8	4
553.250	BC 80	118	96	80	M10	4
553.260	BC 100	144	118	100	M10	4

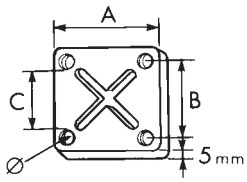

HCBC HIGN-CURRENT BUSBAR CLAMP

- 40 mm/ Holding capacity: 40mm
- This modular busbar bracket is used in transformer combinations.
- The brackets are made from non-magnetic materials for heavy current combinations.
- Please use 2 pcs bracket to assure tightening force.

PRODUCT CODE	DESCRIPTION	A (mm)	B (mm)
553.100	HCBC 80	80	140
553.110	HCBC 100	100	160
553.120	HCBC 120	120	180

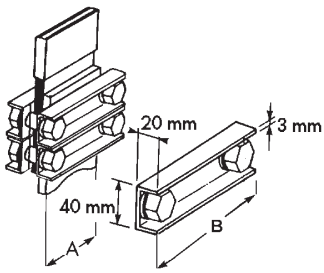

BUSBAR BRACKETS

FBC CONNECTORS FOR CONNECTING without DRILLING

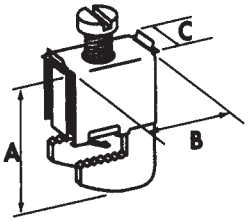

- Applicable to non-perforated busbar combinations.
- Applicable to 5-10 mm busbar thickness.
- Cables from 1 mm² up to 185 mm² or flexibar width 6 to 20 mm

BUSBAR THICKNESS 5 (mm)							
PRODUCT CODE	DESCRIPTION	A (mm)	B (mm)	C (mm)		CABLE SIZE mm²	PACKS OF
553.405	FBC 5x4	23	29	11		4	15
553.400	FBC 5x6	27	23	11.5	6mm	2.5-16	15
553.410	FBC 5x9	38	40	19	9mm	16-50	15
553.510	FBC 5x15,5	44	40	25	15,5mm	35-70	15
553.520	FBC 5x20	49	40	31	20mm	70-185	15

BUSBAR THICKNESS 10 (mm)							
PRODUCT CODE	DESCRIPTION	A (mm)	B (mm)	C (mm)		CABLE SIZE mm²	PACKS OF
553.505	FBC 10x4	28	29	11		4	15
553.430	FBC 10x6	33	23	11.5	6mm	2.5-16	15
553.440	FBC 10x9	42	40	19	9mm	16-50	15
553.530	FBC 10x15,5	49	40	25	15,5mm	35-70	15
553.540	FBC 10x20	54	40	31	20mm	70-185	15

BUSBAR BRACKETS

QCC CLAMP

- Applicable to flexible busbars.
- 1 pcs bracket required for a thickness of 5mm or less; 2 pcs bracket for thicker sizes.

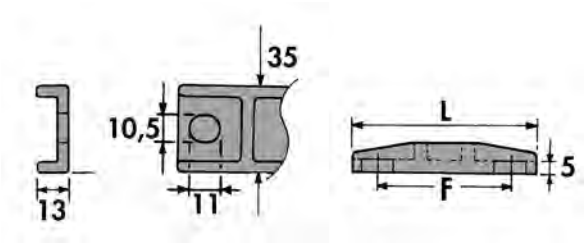

		FLEX BAR				
PRODUCT CODE	DESCRIPTION	MIN (mm)	MAX (mm)	L (mm)	F (mm)	PACKS OF
561.200	QCC 6/13	6	13	48	25	5
561.210	QCC 15,5/32	15.5	32	70	50	5
561.220	QCC 40/63	40	63	95	75	5

CONT KIT

- Special steel screw, nut and washer
- For good electrical contact
- Supply Includes : 100 screw, 100 nut and 200 pcs contact washers
- Washers design from: 8/8 ZN8C

PRODUCT CODE	DESCRIPTION	TORQUE N.m	PACKS OF
558.310	CONT KIT M6 x 16	13	100
558.340	CONT KIT M8 x 30	30	100
558.370	CONT KIT M10 x 30	60	100
558.410	CONT KIT M10 x 50	60	100
558.440	CONT KIT M12 x 30	110	100
558.460	CONT KIT M12 x 40	110	100
558.480	CONT KIT M12 x 50	110	100
558.880	CONT KIT M12 x 60	110	100
558.490	CONT KIT M12 x 80	110	100

CLAMPING TORQUE CALCULATION

0	M6	M8	M10	M12	M14	M16
F(daN)	800	1450	2300	3700	4400	6000
Clamping torque Nm	13	30	60	110	174	274

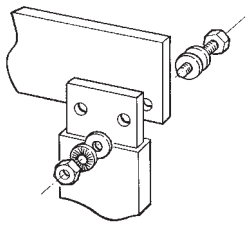

BUSBAR CALCULATION TABLES

ADJUSTABLE BUSBAR SUPPORT

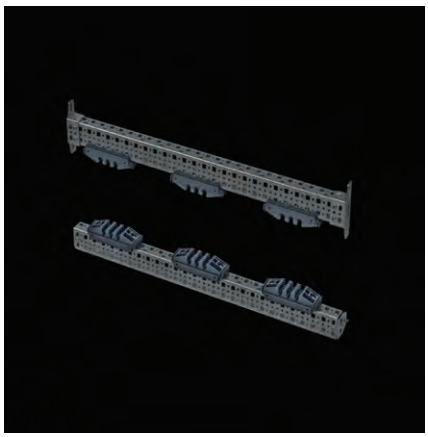

CABS 4/5										
Ipk KA	24	48	63	82	114	145	152	165	187	209
Icc rms KA1s	12	23	30	39	52	66	69	75	85	95
Busbar Section	Distance Between Busbar Supports(mm)									
	Distance Between Phases to D=112,5mm									
30x5mm	1000	664	501	385	276	217	207	191	168	150
40x5mm	1000	755	579	445	318	251	240	220	194	174
50x5mm	1000	845	647	498	356	280	268	247	217	194
63x5mm	1000	948	727	559	400	315	301	277	244	207
80x5mm	1000	1000	819	630	451	355	339	312	259	207
100x5mm	1000	1000	916	704	504	397	380	333	259	207
120x5mm	1000	1000	1000	788	568	430	394	333	259	207
Distance Between Phases to D=125mm										
30x5mm	1000	689	528	406	291	229	219	201	177	159
40x5mm	1000	796	610	469	336	264	253	232	205	183
50x5mm	1000	890	682	525	375	296	283	260	229	205
63x5mm	1000	1000	766	589	421	332	317	292	257	230
80x5mm	1000	1000	863	664	475	374	358	329	288	230
100x5mm	1000	1000	965	742	531	418	400	368	288	230
120x5mm	1000	1000	1000	830	594	468	437	370	288	230
Distance Between Phases to D=150mm										
30x5mm	1000	755	579	445	318	251	240	220	194	174
40x5mm	1000	872	669	514	368	290	277	255	225	201
50x5mm	1000	975	748	575	411	324	310	285	251	225
63x5mm	1000	1000	839	645	462	364	348	320	282	252
80x5mm	1000	1000	946	727	520	410	392	361	318	277
100x5mm	1000	1000	1000	813	582	458	438	403	346	277
120x5mm	1000	1000	1000	910	651	513	490	444	346	*

CABS 4/5										
Ipk KA	48	63	82	114	145	152	165	187	209	231
Icc rms KA1s	23	30	39	52	66	69	75	85	95	105
Busbar Section	Distance Between Busbar Supports(mm)									
	Distance Between Phases to D=150mm									
30x10mm	1000	1000	891	638	502	480	442	390	341	279
40x10mm	1000	1000	1000	736	580	555	510	427	341	279
50x10mm	1000	1000	1000	824	649	620	548	427	341	279
60x10mm	1000	1000	1000	902	709	648	548	427	341	279
80x10mm	1000	1000	1000	1000	709	648	548	427	341	279
100x10mm	1000	1000	1000	1000	709	648	548	427	341	279
120x10mm	1000	1000	1000	1000	709	648	548	427	341	279
Distance Between Phases to D=175mm										
30x10mm	1000	1000	963	689	543	519	477	421	377	326
40x10mm	1000	1000	1000	796	627	599	551	486	399	326
50x10mm	1000	1000	1000	890	701	670	616	498	399	326
60x10mm	1000	1000	1000	975	768	734	640	498	399	326
80x10mm	1000	1000	1000	1000	827	756	640	498	399	326
100x10mm	1000	1000	1000	1000	827	756	640	498	399	326
120x10mm	1000	1000	1000	1000	827	756	640	498	399	326

ADJUSTABLE FLAT BUSBAR SUPPORT

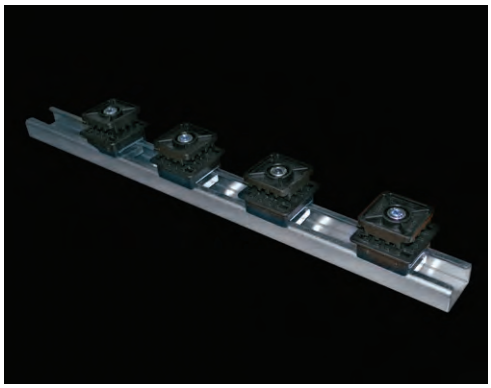

AFBS 600 - AFB										
Ipk KA	11	14	24	48	63	82	114	145	152	165
Icc rms KA1s	23	30	39	52	66	69	75	85	95	105
Busbar Section	Distance Between Busbar Supports(mm)									
30x5mm	1000	1000	1000	698	464	274	140	x	x	x
40x5mm	1000	1000	1000	915	537	317	162	100	x	x
50x5mm	1000	1000	1000	1000	610	361	184	114	104	x
63x5mm	1000	1000	1000	1000	705	416	213	132	121	102
80x5mm	1000	1000	1000	1000	824	490	250	155	142	120
100x5mm	1000	1000	1000	1000	974	576	295	182	167	141
125x5mm	1000	1000	1000	1000	1000	683	350	217	198	168
50X10mm	1000	1000	1000	1000	610	361	184	114	104	x
60x10mm	1000	1000	1000	1000	683	404	206	128	117	x
80x10mm	1000	1000	1000	1000	828	490	250	155	142	120
100x10mm	1000	1000	1000	1000	974	576	295	182	167	141
120x10mm	1000	1000	1000	1000	1000	662	339	210	192	162

COMPACT BUSBAR SUPPORT

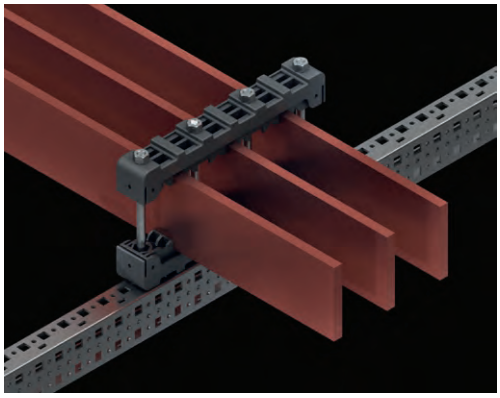

COMPACT BUSBAR SUPPORT					
Busbar Section	Distance Between Busbar Supports(mm)				
	414mm	514mm	714mm	914mm	1114mm
	Short Circuit Efective Value (Icc rms)				
30x5mm	26 KA	21 KA	15 KA	11 KA	9 KA
40x5mm	30 KA	24 KA	17 KA	13 KA	11 KA
50x5mm	34 KA	27 KA	20 KA	15 KA	12 KA
60x5mm	36 KA	29 KA	21 KA	17 KA	13 KA
80x5mm	43 KA	35 KA	25 KA	19 KA	16 KA
100x5mm	48 KA	40 KA	28 KA	22 KA	17 KA

COMPACT BUSBAR SUPPORT					
Busbar Section	Distance Between Busbar Supports(mm)				
	414mm	514mm	714mm	914mm	1114mm
	Short Circuit Efective Value (Icc rms)				
40x10mm	48 KA	40 KA	29 KA	22 KA	18 KA
50x10mm	55 KA	44 KA	32 KA	25 KA	20 KA
60x10mm	61 KA	49 KA	35 KA	27 KA	22 KA
80x10mm	70KA	56 KA	40 KA	31 KA	26KA
100x10mm	78KA	63 KA	45 KA	35 KA	29KA
120x10mm	85KA	69 KA	50 KA	39 KA	32KA

BUSBAR CALCULATION TABLES

ADJUSTABLE BUSBAR SUPPORT (METAL-REINFORCED)

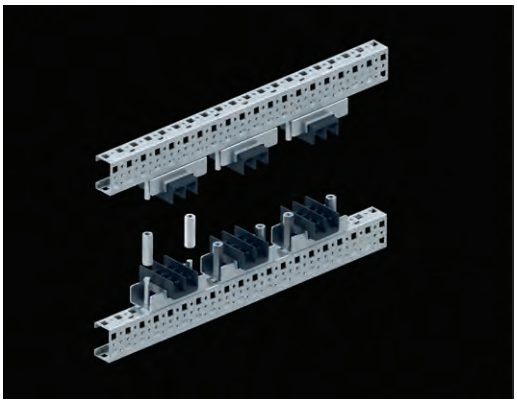

ABS 1/5											
Ipk KA	24	48	63	82	114	145	152	165	187	209	231
Icc rms KA1s	12	23	30	39	52	66	69	75	85	95	105
Busbar Section	Distance Between Busbar Supports(mm)										
	Distance Between Phases to D=75mm										
50x5mm	801	398	305	234	167	132	126	116	102	X	X
63x5mm	900	446	342	263	188	148	141	130	115	102	X
80x5mm	1000	503	386	296	212	167	159	147	129	116	104
100x5mm	1000	563	431	331	237	187	178	164	145	129	117
125x5mm	1000	629	482	371	265	209	200	184	162	145	131
Distance Between Phases to D=100mm											
50x5mm	925	459	352	270	193	152	145	134	118	105	X
63x5mm	1000	516	395	304	217	171	163	150	132	118	107
80x5mm	1000	581	445	342	245	193	184	169	149	134	121
100x5mm	1000	650	498	383	274	216	206	190	167	149	135
125x5mm	1000	727	557	428	306	241	231	212	187	167	151
Distance Between Phases to D=125mm											
50x5mm	1000	514	394	303	216	170	163	150	132	118	107
63x5mm	1000	577	442	340	243	191	183	168	148	133	120
80x5mm	1000	650	498	383	274	216	206	190	167	149	135
100x5mm	1000	727	557	428	306	241	231	212	187	167	151
125x5mm	1000	813	623	479	343	270	258	237	209	187	169
Distance Between Phases to D=150mm											
50x5mm	1000	563	431	331	237	187	178	164	145	129	117
63x5mm	1000	632	484	372	266	210	200	184	162	145	131
80x5mm	1000	712	546	420	300	236	226	208	183	164	148
100x5mm	1000	796	610	469	336	264	253	232	205	183	166
125x5mm	1000	890	682	525	375	296	283	260	229	205	185
Distance Between Phases to D=175mm											
50x5mm	1000	608	466	358	256	202	193	177	156	140	126
63x5mm	1000	683	523	402	288	226	216	199	176	157	142
80x5mm	1000	769	590	453	324	255	244	224	198	177	160
100x5mm	1000	860	659	507	363	285	273	251	221	198	179
125x5mm	1000	962	737	567	406	319	305	281	248	222	200
Distance Between Phases to D=200mm											
50x5mm	1000	650	498	383	274	216	206	190	167	149	185
63x5mm	1000	730	559	430	308	242	232	213	188	168	152
80x5mm	1000	822	630	485	347	273	261	240	212	189	171
100x5mm	1000	920	705	542	388	305	292	268	237	212	191
125x5mm	1000	1000	788	606	434	341	327	300	265	237	214

ADJUSTABLE BUSBAR SUPPORT (METAL-REINFORCED)

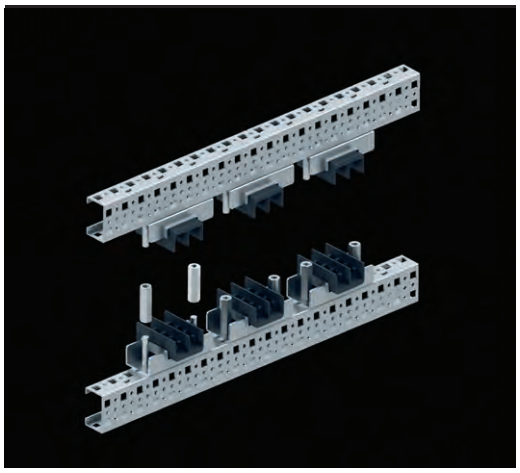

ABS 4/5											
Ipk KA	24	48	63	82	114	145	152	165	187	209	231
Icc rms KA1s	12	23	30	39	52	66	69	75	85	95	105
Busbar Section	Distance Between Busbar Supports(mm)										
	Distance Between Phases to D=100mm										
50x5mm	1000	920	705	542	388	305	292	268	237	212	191
63x5mm	1000	1000	791	608	435	343	328	302	266	238	215
80x5mm	1000	1000	892	686	491	386	370	340	300	268	242
100x5mm	1000	1000	997	767	549	432	413	380	335	300	262
125x5mm	1000	1000	1000	857	614	483	462	425	375	320	262
Distance Between Phases to D=125mm											
50x5mm	1000	1000	788	606	434	341	327	300	265	237	214
63x5mm	1000	1000	885	680	487	383	367	337	297	266	241
80x5mm	1000	1000	997	767	549	432	413	380	335	300	271
100x5mm	1000	1000	100	854	614	483	462	425	375	335	303
125x5mm	1000	1000	1000	959	686	540	517	475	419	375	327
Distance Between Phases to D=150mm											
50x5mm	1000	1000	863	664	475	374	358	329	290	260	235
63x5mm	1000	1000	969	745	533	420	402	369	326	291	264
80x5mm	1000	1000	1000	840	601	473	453	416	367	329	297
100x5mm	1000	1000	1000	939	672	529	506	466	411	368	332
125x5mm	1000	1000	1000	1000	752	592	566	521	459	411	372
Distance Between Phases to D=175mm											
50x5mm	1000	1000	933	717	513	404	387	356	314	280	254
63x5mm	1000	1000	1000	805	576	454	434	399	352	315	285
80x5mm	1000	1000	1000	907	649	511	489	450	394	355	321
100x5mm	1000	1000	1000	1000	726	572	547	503	444	397	359
125x5mm	1000	1000	1000	1000	812	640	612	563	496	444	402
Distance Between Phases to D=200mm											
50x5mm	1000	1000	997	767	549	432	413	380	335	300	271
63x5mm	1000	1000	1000	861	616	485	464	427	376	337	305
80x5mm	1000	1000	1000	970	694	547	523	481	424	380	343
100x5mm	1000	1000	1000	1000	776	611	585	538	475	425	384
125x5mm	1000	1000	1000	1000	868	684	654	602	531	475	429

BUSBAR CALCULATION TABLES

ABS 1/10											
Ipk KA	24	48	63	82	114	145	152	165	187	209	231
Icc rms KA1s	12	23	30	39	52	66	69	75	85	95	105
Busbar Section	Distance Between Busbar Supports(mm)										
	Distance Between Phases to D=75mm										
50x10mm	1000	796	610	469	336	264	253	232	205	183	166
60x10mm	1000	872	669	514	368	290	277	255	225	201	182
80x10mm	1000	1000	772	594	425	334	320	294	250	224	183
100x10mm	1000	1000	863	664	475	374	358	329	280	224	183
120x10mm	1000	1000	946	727	520	410	392	360	280	224	183
160x10mm	1000	1000	1000	840	601	466	426	360	280	224	183
200x10mm	1000	1000	1000	939	672	466	426	360	280	224	183
Distance Between Phases to D=100mm											
50x10mm	1000	920	705	542	388	305	292	268	237	212	191
60x10mm	1000	1000	772	594	425	334	320	294	259	232	210
80x10mm	1000	1000	892	686	491	386	370	340	300	268	242
100x10mm	1000	1000	997	767	549	432	413	380	335	299	245
120x10mm	1000	1000	1000	840	601	473	453	416	367	299	245
160x10mm	1000	1000	1000	970	694	547	523	481	374	299	245
200x10mm	1000	1000	1000	1000	776	611	568	481	374	299	245
Distance Between Phases to D=125mm											
50x10mm	1000	1000	788	606	434	341	327	300	265	237	214
60x10mm	1000	1000	863	664	475	374	358	329	290	260	235
80x10mm	1000	1000	997	767	549	432	413	380	335	300	271
100x10mm	1000	1000	1000	857	614	483	462	425	375	335	303
120x10mm	1000	1000	1000	939	672	529	506	466	411	368	306
160x10mm	1000	1000	1000	1000	776	611	585	538	468	374	306
200x10mm	1000	1000	1000	1000	868	684	654	601	468	374	306
Distance Between Phases to D=150mm											
*	1000	1000	863	664	475	374	358	329	290	260	235
60x10mm	1000	1000	946	727	520	410	392	361	318	284	257
80x10mm	1000	1000	1000	840	601	473	453	416	367	329	297
100x10mm	1000	1000	1000	939	672	529	506	466	411	368	332
120x10mm	1000	1000	1000	1000	736	58	555	510	450	403	364
160x10mm	1000	1000	1000	1000	851	670	641	589	520	450	368
200x10mm	1000	1000	1000	1000	951	749	717	659	562	450	368
Distance Between Phases to D=175mm											
50x10mm	1000	1000	933	717	513	404	387	356	314	280	254
60x10mm	1000	1000	1000	786	562	443	423	390	344	307	278
80x10mm	1000	1000	1000	907	649	511	489	450	397	355	321
100x10mm	1000	1000	1000	1000	726	572	547	503	444	397	359
120x10mm	1000	1000	1000	1000	796	627	599	551	486	435	393
160x10mm	1000	1000	1000	1000	919	724	692	637	562	502	429
200x10mm	1000	1000	1000	1000	1000	809	774	712	628	525	429
Distance Between Phases to D=200mm											
50x10mm	1000	1000	997	767	549	432	413	380	335	300	171
60x10mm	1000	1000	1000	840	601	473	453	416	367	329	297
80x10mm	1000	1000	1000	970	694	547	523	481	424	380	343
100x10mm	1000	1000	1000	1000	776	611	585	538	475	425	384
120x10mm	1000	1000	1000	1000	851	670	641	589	520	465	421
160x10mm	1000	1000	1000	1000	982	774	740	681	601	537	486
200x10mm	1000	1000	1000	1000	1000	865	828	761	672	600	491

ADJUSTABLE BUSBAR SUPPORT (METAL-REINFORCED)

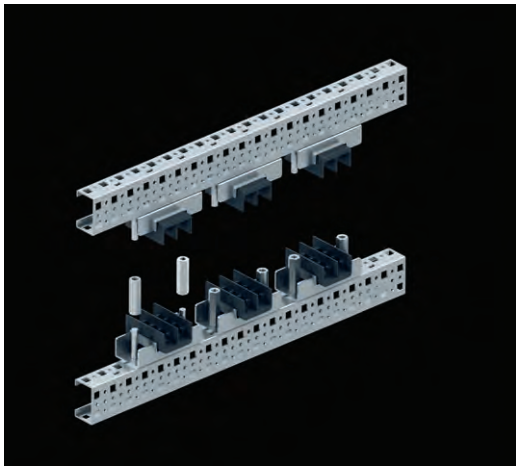

ABS 2/10											
Ipk KA	24	48	63	82	114	145	152	165	187	209	231
Icc rms KA1s	12	23	30	39	52	66	69	75	85	95	105
Busbar Section	Distance Between Busbar Supports(mm)										
	Distance Between Phases to D=125mm										
50x10mm	1000	1000	1000	857	614	483	462	425	375	335	303
60x10mm	1000	1000	1000	939	672	529	506	466	411	368	327
80x10mm	1000	1000	1000	1000	776	611	585	538	475	400	327
100x10mm	1000	1000	1000	1000	868	684	654	602	500	400	327
120x10mm	1000	1000	1000	1000	951	749	717	642	500	400	327
160x10mm	1000	1000	1000	1000	1000	830	759	642	500	400	327
200x10mm	1000	1000	1000	1000	1000	830	759	642	500	400	327
Distance Between Phases to D=150mm											
50x10mm	1000	1000	1000	939	672	529	506	466	411	368	332
60x10mm	1000	1000	100	100	736	580	555	510	450	403	364
80x10mm	1000	1000	1000	1000	851	670	641	589	520	465	393
100x10mm	1000	1000	1000	1000	951	749	717	659	581	480	393
120x10mm	1000	1000	1000	1000	1000	821	785	722	600	480	393
160x10mm	1000	1000	1000	1000	1000	948	907	771	600	480	393
200x10mm	1000	1000	1000	1000	1000	996	911	771	600	480	393
Distance Between Phases to D=175mm											
50x10mm	1000	1000	1000	1000	726	572	547	503	444	394	359
60x10mm	1000	1000	1000	1000	796	627	599	551	486	435	393
80x10mm	1000	1000	1000	1000	919	724	692	637	562	502	455
100x10mm	1000	1000	1000	1000	1000	809	774	712	628	560	459
120x10mm	1000	1000	1000	1000	1000	887	848	780	688	560	459
160x10mm	1000	1000	1000	1000	1000	1000	979	900	700	560	459
200x10mm	1000	1000	1000	1000	1000	1000	1000	900	700	560	459
Distance Between Phases to D=200mm											
50x10mm	1000	1000	1000	1000	776	611	585	538	475	425	384
60x10mm	1000	1000	1000	1000	851	170	641	589	520	465	421
80x10mm	1000	1000	1000	1000	982	774	740	681	601	537	486
100x10mm	1000	1000	1000	1000	1000	865	828	761	672	601	524
120x10mm	1000	1000	1000	1000	1000	948	907	834	736	641	524
160x10mm	1000	1000	1000	1000	1000	1000	1000	963	801	641	524
200x10mm	1000	1000	1000	1000	1000	1000	1000	1000	801	641	524

BUSBAR CALCULATION TABLES

ADJUSTABLE BUSBAR SUPPORT (METAL-REINFORCED)

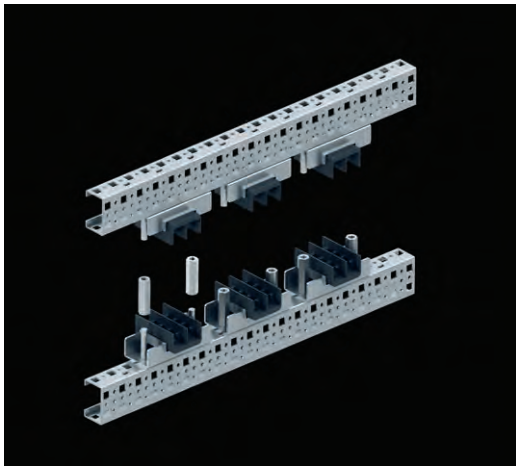

ABS 3/10											
Ipk KA	24	48	63	82	114	145	152	165	187	209	231
Icc rms KA1s	12	23	30	39	52	66	69	75	85	95	105
Busbar Section	Distance Between Busbar Supports(mm)										
	Distance Between Phases to D=150mm										
50x10mm	1000	1000	1000	1000	824	649	620	521	503	450	393
60x10mm	1000	1000	1000	1000	902	711	680	625	552	480	393
80x10mm	1000	1000	1000	1000	1000	821	785	722	600	480	393
100x10mm	1000	1000	1000	1000	1000	918	848	771	600	480	393
120x10mm	1000	1000	1000	1000	1000	996	911	771	600	480	393
160x10mm	1000	1000	1000	1000	1000	996	911	771	600	480	393
200x10mm	1000	1000	1000	1000	1000	996	911	771	600	480	393
Distance Between Phases to D=175mm											
50x10mm	1000	1000	1000	1000	890	701	670	616	544	486	440
60x10mm	1000	1000	1000	1000	975	768	734	675	596	533	459
80x10mm	1000	1000	1000	1000	1000	887	848	780	688	560	459
100x10mm	1000	1000	1000	1000	1000	991	948	872	700	560	459
120x10mm	1000	1000	1000	1000	1000	1000	1000	900	700	560	459
160x10mm	1000	1000	1000	1000	1000	1000	1000	900	700	560	459
200x10mm	1000	1000	1000	1000	1000	1000	1000	900	700	560	459
Distance Between Phases to D=200mm											
50x10mm	1000	1000	1000	1000	951	749	717	659	581	520	471
60x10mm	1000	1000	1000	1000	1000	821	785	722	637	570	516
80x10mm	1000	1000	1000	1000	1000	948	907	834	736	641	524
100x10mm	1000	1000	1000	1000	1000	1000	1000	933	801	641	524
120x10mm	1000	1000	1000	1000	1000	1000	1000	1000	801	641	524
160x10mm	1000	1000	1000	1000	1000	1000	1000	1000	801	641	524
200x10mm	1000	1000	1000	1000	1000	1000	1000	1000	801	641	524

Exact Match for **Tekpan** Enclosures

COSMOTEC industrial cooling STULZ

VENTILATION FILTERS AND FANS 236

AIR-CONDITIONERS AND HEAT EXCHANGERS 238

HEATERS 244

THERMAL CONTROL PRODUCTS 245

Controlling enclosure or cabinet internal temperature is crucial for the efficiency of the equipments operating inside. In electrical equipments, particulary those operating with electronic signalling, heat and dust directly effect equipment performance. The maximum temperature for equipments supposed to operate at max 30°C should not exceed 26-27°C In particular, efficiency of CPU operated equipments decrease if not cooled. As a result of this, the equipments fail communicate at the desired speed and efficiency leading to temporary or permanent malfunction. Tracking costs of these malfunctions are known by everyone. There is also another problem in terms of heat and chemicals. External dust sticks on the surface of the CPU or other equipments during cooling. It gradually strafies and constitutes a layer between the surface and air. This layer blocks cooling regardless of the cooling equipment and causes malfunctions. This is the first impact of the dust. The second impact is chemical and physical. As known, dust acidifies metal particles and accomodates similar bacteria. These cause corrosion on the conductive surface and separation of contacts and conductors. These even decrease conductivity of the material. Another factor that affects the equipments is humidity. As oxidized materials in humidity cause separation in inter-conductor contact, they increase the temperature and decrease the flow.

Here follow a summary of the factors to consider for cooling electrical equipments and maintaining their performance:

1-) Heat radiated by the equipment (watt value in terms of total power)
2-) Outdoor temperature
3-) Dust
4-) Outdoor humidity proportion (multiple humidity)

Suitable air-conditioning product can be chosen according to heat radiated by the equipment, enclosure/cabinet size and outdoor temperature factors. Please contact our customer service for your requests.

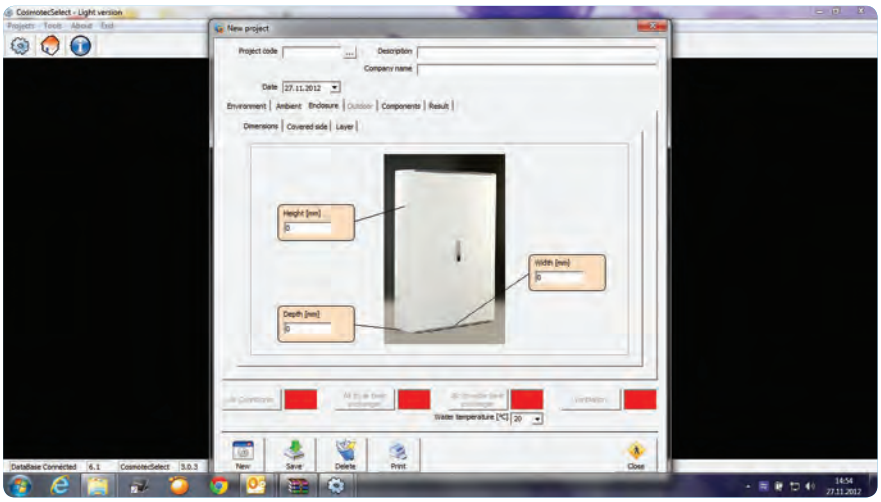

AIR-CONDITIONING APPLICATIONS BY FACTORS

1 MAX. OUTDOOR TEMP ≤ REQUIRED MAX. INDOOR TEMP. HARMLESS DUST and HUMIDITY DENSITY

METHOD I
(PASSIVE VENTILATION)

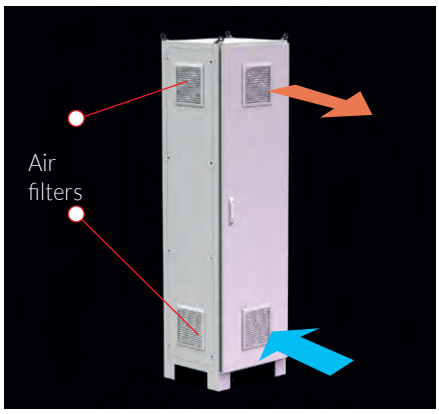

METHOD II
(ACTIVE VENTILATION)

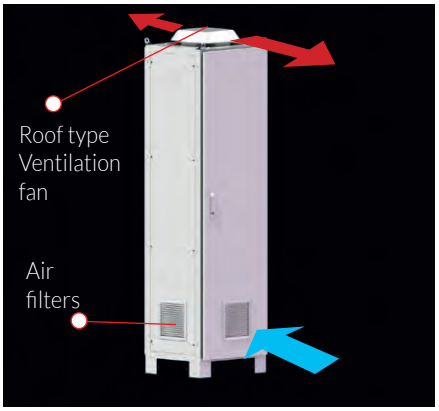

ATTENTION : In Method I equipment heat is not high. Filters require maintanence.
In Method II equipment heat is high. Air volume is required. Filters require maintanence.

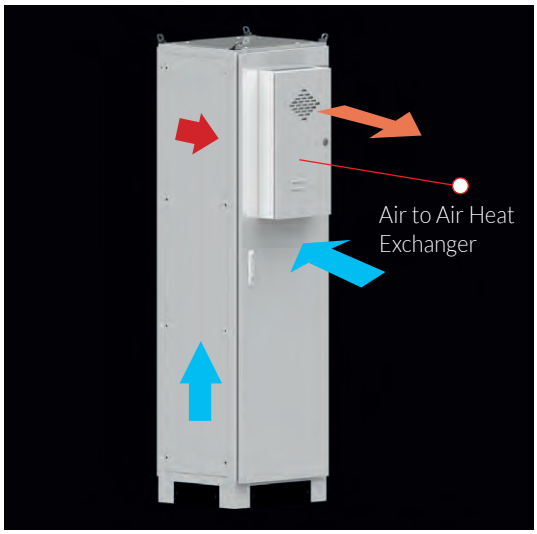

2 MAX. OUTDOOR TEMP ≤ REQUIRED MAX. INDOOR TEMP HARMFUL DUST and HUMIDITY DENSITY

- As dense dust and humidity frequently fills the filters, air flow and cooling weakens. The filters require frequent maintanence and this poses a risk.
- Heat exchangers do not mix indoor air flow and outer air flow. It is dust-resistant and does not require cleaning. There is no risk of failure as they do not have compressing and gas. It is not consume in high level energy

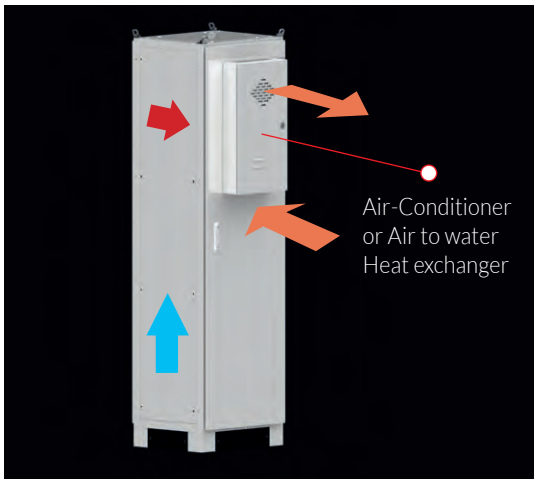

3 MAX. OUTDOOR TEMP ≥ REQUIRED MAX. INDOOR TEMP HARMFUL DUST and HUMIDITY DENSITY

- High outdoor heat is reduced to the desired level by means of gas and compressing equipment.
- Indoor cooling (evaporator) and outer cooling (condenser) are separate, and the indoor environment does not catch any dust from outside.
- The condenser requires cleaning at regular intervals.
- Cooling is restored by use of air/ water type heater exchanger. No compressor cost, low energy consumption. Outdoor of the compressor does not cause overheating with the condenser.

AIR FILTERS (RAL 7035)

Material : ABS Ral 7035

IP Rate : IP 54

- Easy cleaning with drawer filter.

PRODUCT CODE	FILTER SIZE
983.106	150x150 mm
983.107	250x250 mm
983.110	325x325 mm

AIR FILTERS (CHROME COLOR)

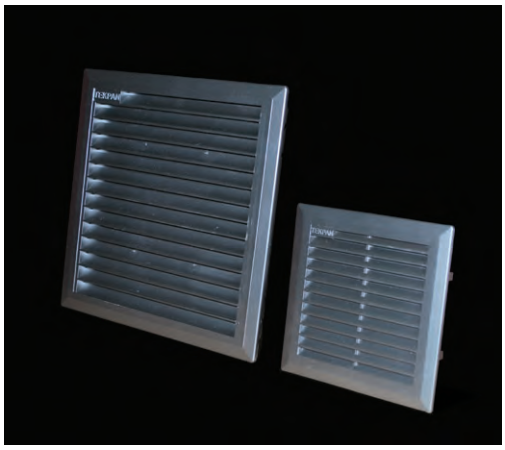

Material : ABS + metallic coating

IP Rate : IP 54

- Easy cleaning with drawer filter.

PRODUCT CODE	FILTER SIZE
983.108	150x150 mm
983.109	250x250 mm
983.111	325x325 mm

FAN WITH FILTER

IP Rate : IP 54

Used Fan : EBM PAPST

- 230V AC Voltage
- It suggest using at the situation which the maximum inside required temperature is higher than or equal maximum outside temperature.
- At standard fans fix to eject air. For opposite the fan positions must be changed.

PRODUCT CODE	FILTER SIZE	COLOUR	AIR FLOW	FAN POWER
983.131	150x150mm	RAL 7035	60m³/hour	19W
983.141	250x250mm	RAL 7035	160m³/hour	45W
983.151	250x250mm	RAL 7035	450m³/hour	64W
983.331	150x150mm	CROME	60m³/hour	19W
983.341	250x250mm	CROME	160m³/hour	45W
983.351	250x250mm	CROME	450m³/hour	64W

ROOF TYPE VENTILATION FAN

RAIN CANOPY WITH FAN FILTER

Material 1,50 mm Galvanized steel+RAL 7035 polyester coating filtre: ABS

IP Rate IP 55

Supply Includes 1 Pcs rain canopy , 1 Pcs 150x150 mm or 250x250 mm filtered ventilation, assembly parts

Protective Ventilation Filter	
Filter Dimension	PRODUCT CODE
150x150 mm	**983.121**
250x250 mm	**983.122**

Material 1,50 mm Galvanized steel+RAL 7035 polyester coating filtre: ABS

IP Rate IP 55

Supply Includes 1 Pcs raincoat, 1 Pcs 150x150 mm or 250x250 mm filtered ventilation, assembly parts, 1 Pcs Fan

Ventilation Filter with Protective Fan			
Filter dimension	Voltage	Motor Power	PRODUCT CODE
150x150 mm	230 V AC	19 W	**983.123**
250x250 mm	230 V AC	45 W	**983.124**

ROOF TYPE VENTILATION FAN

Colour : RAL 7035

IP Rate : IP 54

Used Fan : EBM PAPST

- Used in 230V AC.
- It ejects the heated air inside of the enclosure coming from vertical angle to horizantal angle. From the reason type of fan which ejects the air with horizantal angle, the counterpressure is at the minumum level. By this way it makes active and economic cooling with less power/ consumption and low fan cost.
- It requires sufficient size of air filters for compensation of the enclosure inside pressure between fan force of gravity.
- It suggests using at the situation which the maximum inside required temprature is higher than or equal maximum outside temperature
- Required max. inside temp. $\geqslant$ Outside max. temp

PRODUCT CODE	FAN FLOW	FAN POWER
982.202	560 m³/saat	58 W
982.203	970 m³/saat	85 W

WALL-MOUNTED AIR-CONDITIONERS

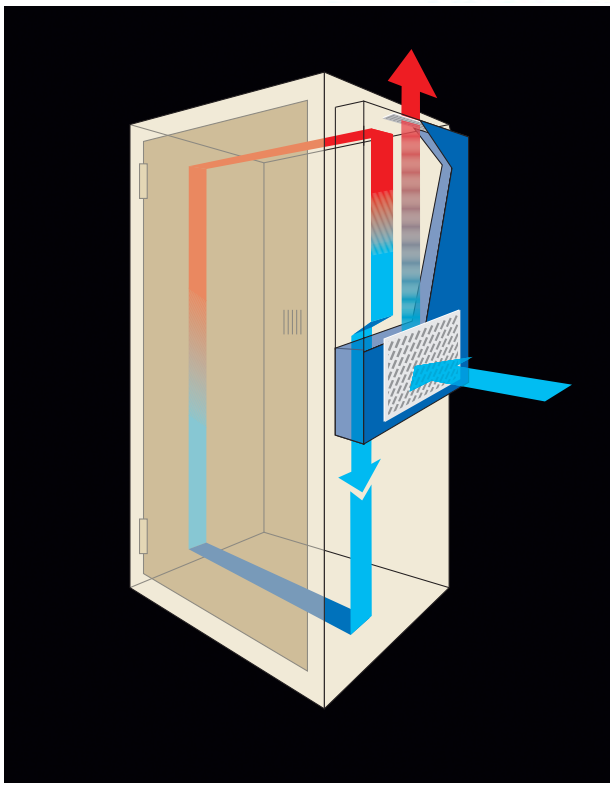

- 230 V products are in stock. Please contact our customer service for 115 V or 400 V product demands.
- Please contact our customer service for your UL version product demands.

			AIR CONDITIONER SIZES mm					
PRODUCT CODE	COOLING CAPACITY (W)	POWER SUPPLY V-ph-Hz	WIDTH	HEIGHT	DEPTH	FAN FLOW (m^3/h)	POWER CONSUMPTION (W)	WEIGHT Kg
CVE05002208000	550/580	230-1-50/60	315	642	221	164-195	295	17
CVE08002208000	850/900	230-1-50/60	315	642	221	406	435	27
CVE11002208000	1100/1150	230-1-50/60	413	913	248	540-580	505	44
CVE15002208000	1500/1600	230-1-50/60	413	913	248	540-580	630	46
CVE20002208000	2100/2200	230-1-50/60	413	1005	263	540-580	980	48
CVE30002208000	3000/3150	230-1-50/60	514	1219	347	890-930	1100	75

AC / AIR-CONDITIONERS

TOP MOUNTED AIR-CONDITIONERS

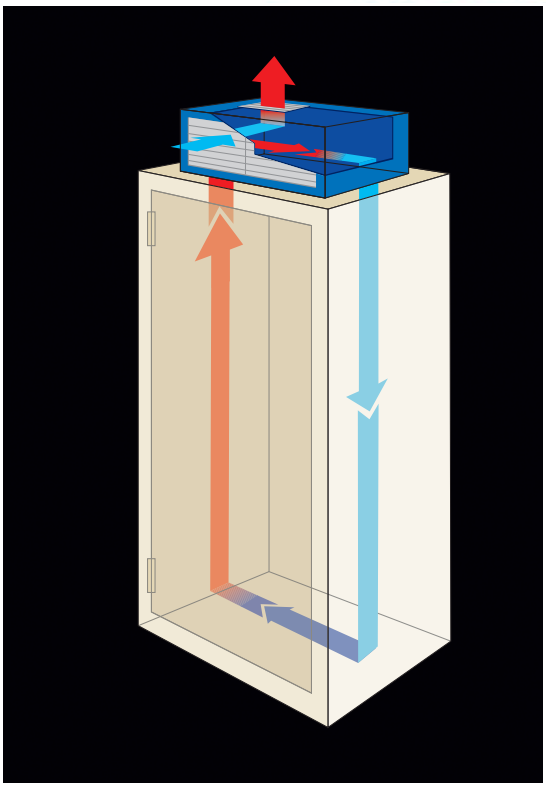

- 230 V products are in stock. Please contact our customer service for 115V or 400V product demands.
- Please contact our customer service for your UL version product demands.

			AIR CONDITIONER SIZES mm					
PRODUCT CODE	COOLING CAPACITY (W)	POWER SUPPLY V-ph-Hz	WIDTH	HEIGHT	DEPTH	FAN FLOW (m^3/h)	POWER CONSUMPTION (W)	WEIGHT Kg
ETE20002207000	2000	230-1-50/60	600	450	400	860	1200	51.5
ETE41002207000	3800	230-1-50/60	800	480	450	1450	2000	76.5

WALL-MOUNTED OUTDOOR AIR-CONDITIONERS

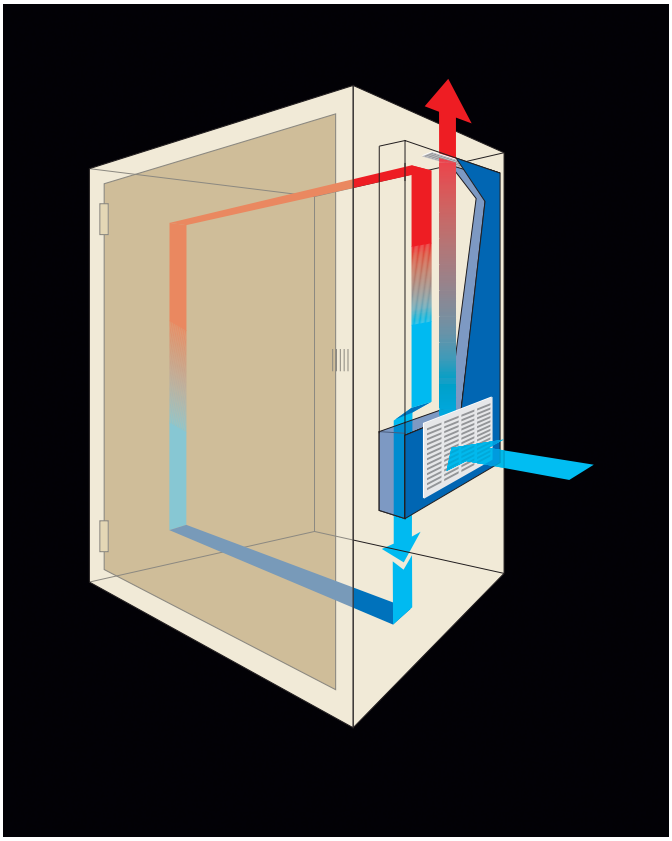

- 230V products are in stock. Please contact our customer service for 115V or 400V product demands.

			AIR CONDITIONER SIZES mm					
PRODUCT CODE	COOLING CAPACITY (W)	POWER SUPPLY V-ph-Hz	WIDTH	HEIGHT	DEPTH	FAN FLOW (m^3/h)	POWER CONSUMPTION (W)	WEIGHT Kg
CVO08002208000	850/900	230-1-50/60	308	634	221	340-356	430	26
CVO15002208000	1500/1600	230-1-50/60	409	934	244	540-580	630	42
CVO20002208000	2100/2200	230-1-50/60	409	934	244	540-580	980	44
CVO40002208000	4000/4100	230-1-50/60	508	1234	375	1730-1950	1640	81

HEAT EXCHANGERS

AIR / AIR HEAT EXCHANGERS (INDOOR)

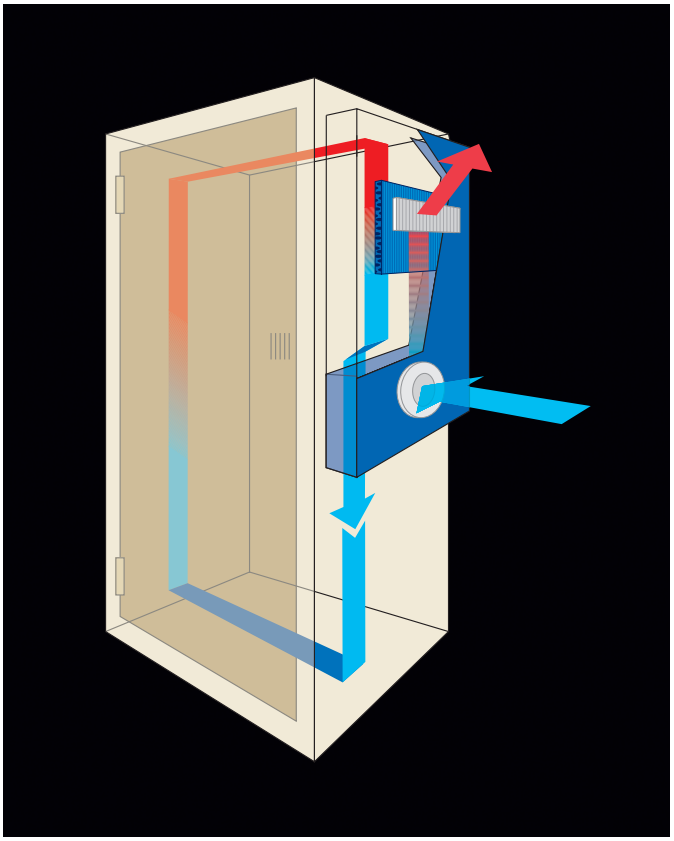

PRODUCT CODE	SPECIFIC HEAT TRANSMISSION (W/K)	POWER SUPPLY V-ph-Hz	AIR CONDITIONER SIZES mm			FAN FLOW (m^3/h)	POWER CONSUMPTION (W)	WEIGHT Kg
			WIDTH	HEIGHT	DEPTH			
XVA3500320	35	230-1-50/60	252	780	86	575	160	7,5
XVA8000320	80	230-1-50/60	311	1250	106	860	170	20

AIR / WATER HEAT EXCHANGERS (INDOOR)

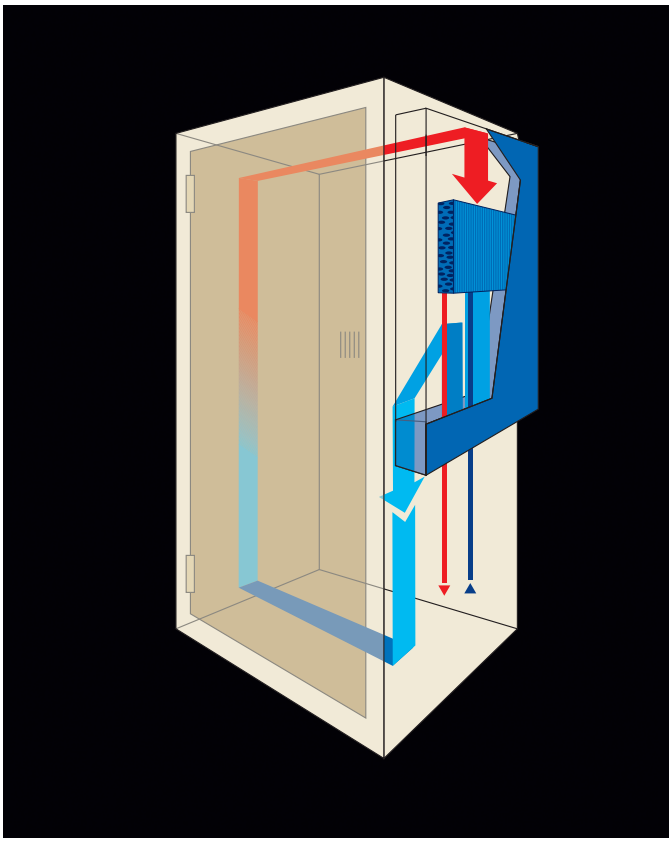

PRODUCT CODE	COOLING CAPACITY (W)	POWER SUPPLY V-ph-Hz	AIR CONDITIONER SIZES mm			FAN FLOW (m^3/h)	POWER CONSUMPTION (W)	WEIGHT Kg
			WIDTH	HEIGHT	DEPTH			
EXW1500220	2200	230-1-50/60	400	925	205	330	575	20
EXW5000220	6700	230-1-50/60	501	1101	300	1450	215	39
EXWA500220	17500	230-1-50/60	800	2000	600	2365	170	90
EXWB000220	25000	230-1-50/60	800	2000	600	4730	340	95

HEATERS

ENCLOSURE HEATERS

Heater device : PTC semi-conductive

Heating body : Eloxal aliminium profile

Body temperature : 75-130 °C

IP Rate : IP 20

Combination : with two 0,75- 1,50m² screw terminal.

- 110-230 V AC/DC
- In line with the CE norms.
- Mounting on 35mm DIN rail with a clip-on.

			HEATER SIZE mm		
PRODUCT CODE	POWER (W)	BODY HEAT	WIDTH	HEIGHT	DEPTH
984.100	20	85	82	65	42
984.200	30	85	82	75	42
984.300	50	85	82	85	42
984.400	75	125	82	105	42
984.500	100	125	82	120	42
984.600	125	125	82	150	42
984.700	150	125	82	190	42

ENCLOSURE HEATERS WITH FAN

Heater device : PTC semi-conductive

Heating body : Eloxal aliminium profile

Body temperature : 120 °C

IP Rate : IP 20

Combination : with 2,5mm² screw terminal.

- 110-230 V AC/DC
- In line with the CE norms.
- Mounting on 35mm DIN rail with a clip-on.

			HEATER SIZE mm		
PRODUCT CODE	POWER (W)	BODY HEAT	WIDTH	HEIGHT	DEPTH
984.101	300-600	120	82	180	110

THERMAL CONTROL PRODUCTS

FAN THERMOSTATE

Sensor device : Bimetallic thermostate

IP Rate : IP20

Product Code : **983.011** (1 pcs)

- In line with the CE norms.
- Mounting on 35mm DIN rail.
- 0,75 - 1,50 mm2 combination
- Normally opened switch (NO)
- 110-230 V AC/DC 10A

HEATER THERMOSTATE

Sensor device : Bimetallic thermostate

IP Rate : IP20

Product Code : **983.012** (1 pcs)

- In line with the CE norms.
- Mounting on 35mm DIN rail.
- 0,75 - 1,50 mm2 combination
- Normally closed switch (NC)
- 110-230 V AC/DC 10A

HYGROSTAT

Sensor device : Bimetallic thermostate

IP Rate : IP20

Product Code : **983.013** (1 pcs)

- In line with the CE norms.
- Mounting on 35mm DIN rail.
- 2,5mm2 combination.
- Both open and closed switch (NO/NC)
- For simultaneous cooling and heating applications.
- 110-230 V AC/DC

FAN-2
10.
GRUP
9.
GRUP

LIGHTING ACCESSORIES 248

GROUP POWER SOCKETS 250

LOCK ACCESSORIES 252

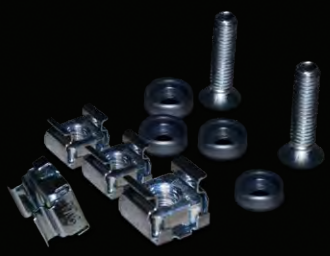

MOUNTING ACCESSORIES 254

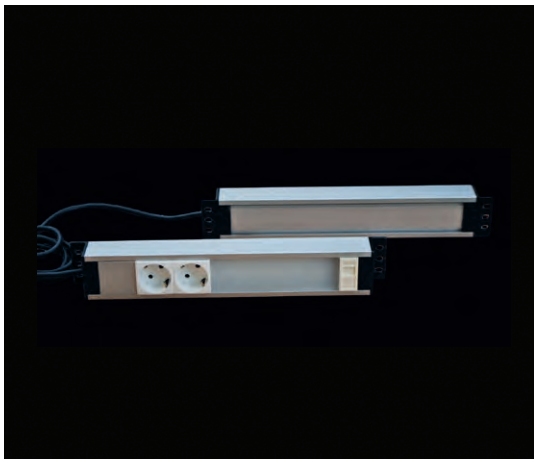

LED LIGHT ENCLOSURE LAMP (SCREWED/TYPE)

- 230V AC 6W
- 2 pcs of socked plugs+switch cable

Product Code : 901.110

LED LIGHT ENCLOSURE LAMP (MAGNETIC/TYPE)

- 230V AC 6W
- 2 pcs of socked plugs+switch cable

Product Code : 901.120

LED LIGHT ENCLOSURE LAMP (FLAT /TYPE)

- 230V AC 8W

Product Code : 901.130 - 5W
901.140 - 7W

LIGHTING ACCESSORIES

DOOR LAMP SWITCH

- 230V, 3A, IP65 protection
- Without cable

Reference number: 902.110 (1 pcs)

REQUIRED : Switch bracket is needed for the switch mounting. Please see page 179

DOOR LAMP SWITCH (MINI SWITCH)

- 230V
- Without cable

Product Code : 902.100 (1 pcs)

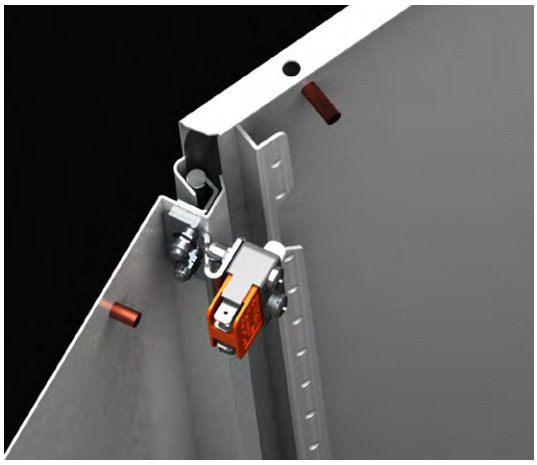

GROUP POWER SOCKETS (STANDARD)

- The sockets fixes into aluminium inlet
- 230V AC, 10/16A
- Earthed socket constructes
- 2 meter 3x1,5 TTR cable and plug
- Place contact with our customer service as to you special requirements

Product Code	OUTPUT SOCKET Qty.	SOCKET TYPE	19" COMPATIBILITY	L1 (mm)	L2 (mm)	L3 (mm)
990.200	6	Network		375	393	354
990.201	7	Network		420	438	399
990.202	8	Network	***	465	483	444
990.203	9	Network		510	528	489
990.204	6	UPS		375	393	354
990.205	7	UPS		420	438	399
990.206	8	UPS	***	465	483	444
990.207	9	UPS		510	528	489

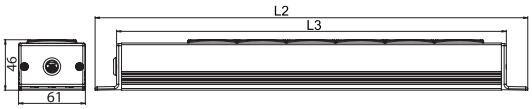

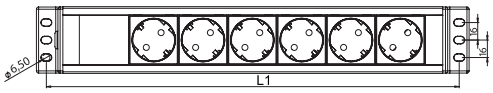

GROUP POWER SOCKETS (WITH FUSE)

- The sockets fixes into aluminium inlet
- 230V AC, 10/16 A
- 16 A Fuse
- Earthed socket constructes
- 2 meter 3x1,5 TTR cable and plug
- Place contact with our customer service as to you special requirements

Product Code	OUTPUT SOCKET Qty.	SOCKET TYPE	19" COMPATIBILITY	L1 (mm)	L2 (mm)	L3 (mm)
990.208	6	Network	***	465	483	444
990.209	7	Network		510	528	489
990.210	8	Network		555	573	534
990.211	9	Network		600	618	579
990.212	6	UPS	***	465	483	444
990.213	7	UPS		510	528	489
990.214	8	UPS		555	573	534
990.215	9	UPS		600	618	579

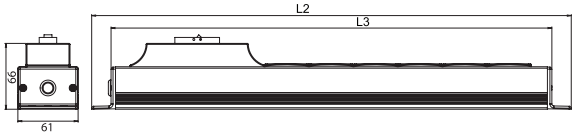

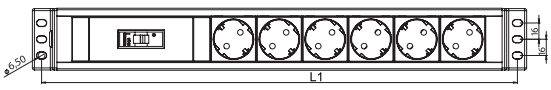

GROUP POWER SOCKETS

GROUP POWER SOCKETS (WITH SWITCH)

- The sockets fixes into aluminium inlet
- 230V AC 10/16A
- ON/OFF switch
- Earthed socket constructes
- 2 meters 3x1,5 TTR cable and plug
- Place contact with our customer service as to you special requirements

Product Code	OUTPUT SOCKET Qty.	SOCKET TYPE	19" COMPATIBILITY	L1 (mm)	L2 (mm)	L3 (mm)
990.216	6	Network		420	438	399
990.217	7	Network	***	465	483	444
990.218	8	Network		510	528	489
990.219	9	Network		555	573	534
990.220	6	UPS		420	438	399
990.221	7	UPS	***	465	483	444
990.222	8	UPS		510	528	489
990.223	9	UPS		555	573	534

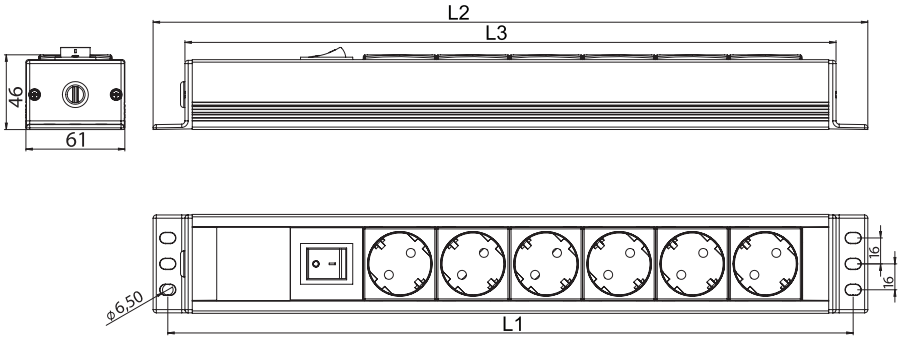

PLASTIC HANDLE LOCK

- Double-bit is standard.
- For Ares series enclosures

Product Code : 951.104 (1 pcs)

CAM LOCK

- Double-bit is standard.
- For Dm series enclosures.

Reference number: 951.100 (1 pcs)

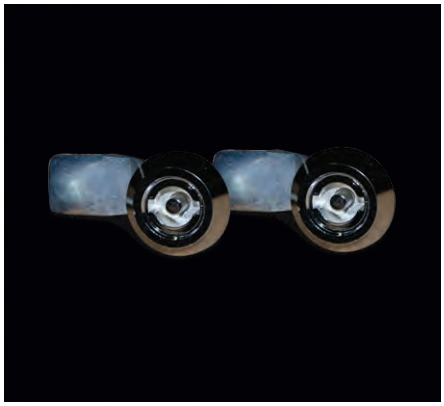

METAL SPRING LOCK

- Made from zinc, double-bit insert.

Product Code : 951.200 (1 pcs)

HANDLE LOCK

- Made from zinc

Product Code : 951.205 (1 pcs)

LOCK ACCESSORIES

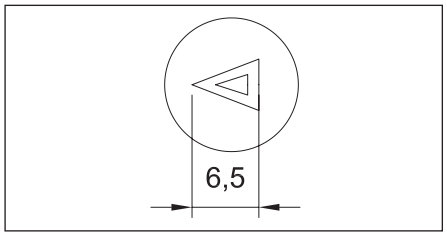

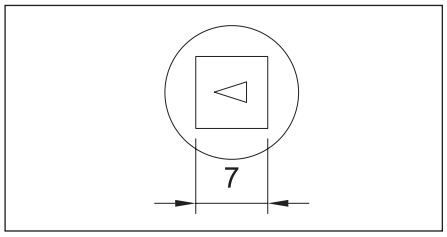

INSERTS

- Plastic handle lock, spring lock and metal spring lock

Relevance : **ARES**

Product Code : 6,50 mm triangle insert : **951.211** (1 pcs)
7 mm square insert : **951.212** (1 pcs)

KEYS

Product Code : Double-bit plastic : **952.100**
Double-bit metal : **952.101**
6,50 mm triangle insert : **952.200** (1 pcs)
7 mm square insert : **952.201** (1 pcs)

KEYS (ENCRYPTED)

Product Code : Euro Key 5333 For DM, DT, HC, RC, PC : **952.300** (1 pcs)

TERMINAL / MCB RAIL

Material : 1,00 mm mild steel + zinc-coated.

Product Code : H 7,50 mm : **990.102** (2 m)
H 15,00 mm : **990.100** (2 m)

MCB BLANK PANEL

Material : ABS Plastic

- 175 mm length, 12 parts

Product Code : **990.101** (1 pcs)

KNITTED EARTHING CABLE

Material : Copper + Tin-plating

Product Code : (DM) M5 screw-perforation 163 mm : **991.200** (10 pcs)
(Ares DT) M5 screw-perforation 260 mm : **991.201** (10 pcs)
(Teos) M8 screw-perforation 260 mm : **991.202** (5 pcs)
Knitted Flex earthing cable 163 mm : **991.205** (1 pcs)
Knitted Flex earthing cable 260 mm : **991.204** (1 pcs)

UNIT COMBINATION GASKET

Material : Polyethylene 10x3mm

Product Code : **992.100** (1 pocket / 5,60 m)

MOUNTING ACCESSORIES

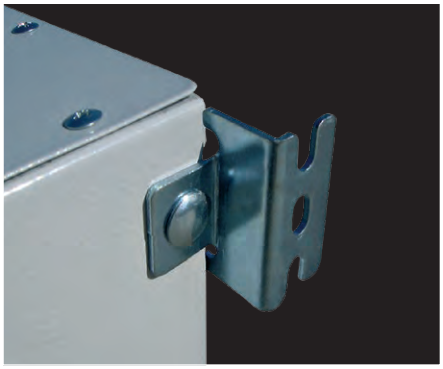

WALL BRACKET

Relevance : Ares

Material : 2,50 mm mild steel + zinc-coated.

Supply includes : 4 pcs wall bracket, combination screws

Product Code : 971.100

WALL BRACKET

Relevance : KT, DM

Material : 2,5 mm Mild Steel + Zinc Coated

Supply includes : 4 pcs wall bracket, gasket, M8 connection screws

Product Code : 971.300

Load Carrying Capacity : 2800 Newton - Vertical

Load Carrying Capacity : 1500 Newton - Horizontal

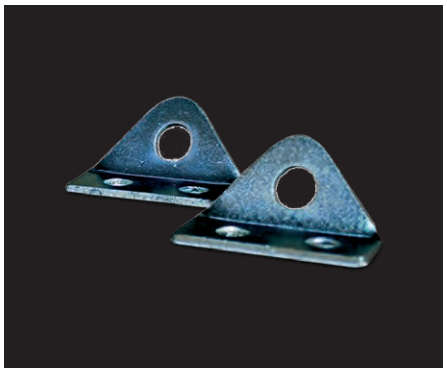

COMBINATION ANGLE

Material : 4.00 mm mild steel + zinc-coated.

Supply includes : 2 pcs support angle

- Only for DT series.

Product Code : **970.300**

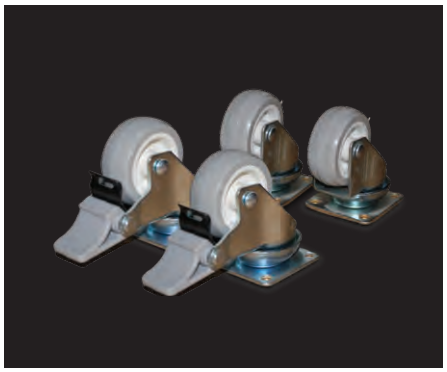

CASTOR SET 50 mm and 80 mm

Supply includes : 2 pcs castor with brakes, 2 pcs castor without brakes, all of them are rotating

Product Code : 50 mm **995.501**
80 mm **995.502**

MOUNTING ACCESSORIES

PLASTIC PLAN POCKET

Material : ABS RAL 7035

Product Code : A4 Size : **994.400**
B5 Size : **994.500**

SPRAY RETOUCH PAINT RAL 7035

Product Code : **996.200** (1 pcs)

STAINLESS STEEL MAINTENANCE SPRAY

Product Code : 996.400

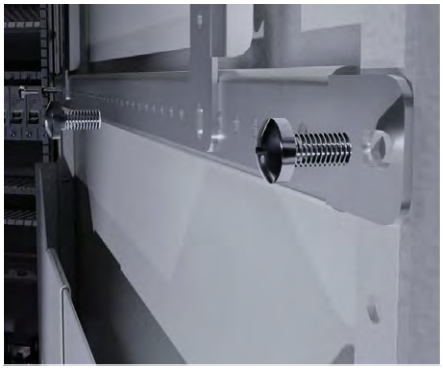

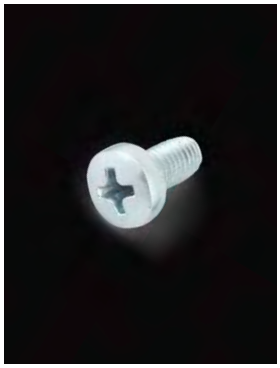

M5x10 SELF TAPPING

- Self topping screw can top 4.50 mm holes

Product Code : 993.105 (100 pcs)

SELF-DRILLING SCREW

- Self-drilling steel screw

Product Code : 993.106 (100 pcs)

M5x15 HEXAGON SELF TAPPING SCREW

- Self topping screw can top 4.50 mm holes

Product Code : 993.107 (100 pcs)

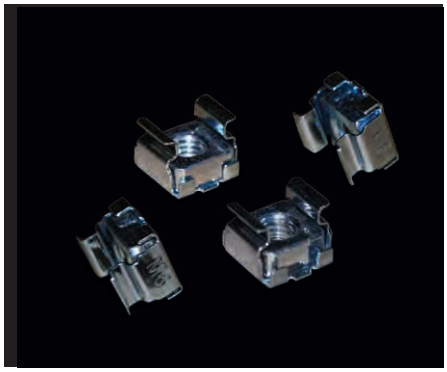

M6 CAGE NUT

- Nut used for mounting rear sheet steel in size 8,50 X 8,50 mm – 9,50 mm square perforations.

Product Code : 994.160 (100 pcs)

MOUNTING ACCESSORIES

M6 HIDE NUT

- Used for mounting the support rails and mounting rails on the enclosure. Mounted on the closed and open profiles from the front surface, 9,50x9,50 mm square perforations.

Product Code : **994.170** (100 pcs)

M6 SCREW NUT SET

- Screw set used for mounting 19'' equipments on the profile with cage nut and M6x 15 screw.

Supply includes : 100 pcs M6 cage nut, 100 pcs plastic washer ring, 100 pcs M6X 15 screw

Product Code : **993.420**

M6 STOPPER SCREW

- Used on rear and side panels of Teos series. Self-stopping structure and prevents panel overtigthtening.

Product Code : **993.322** (16 pcs)

M12 x 30 SCREW and WASHER SET

- It ise used in enclosure baying and fiting on plinth

Supply includes : 4 pcs screw and washer

Product Code : **993.108** (4 set)

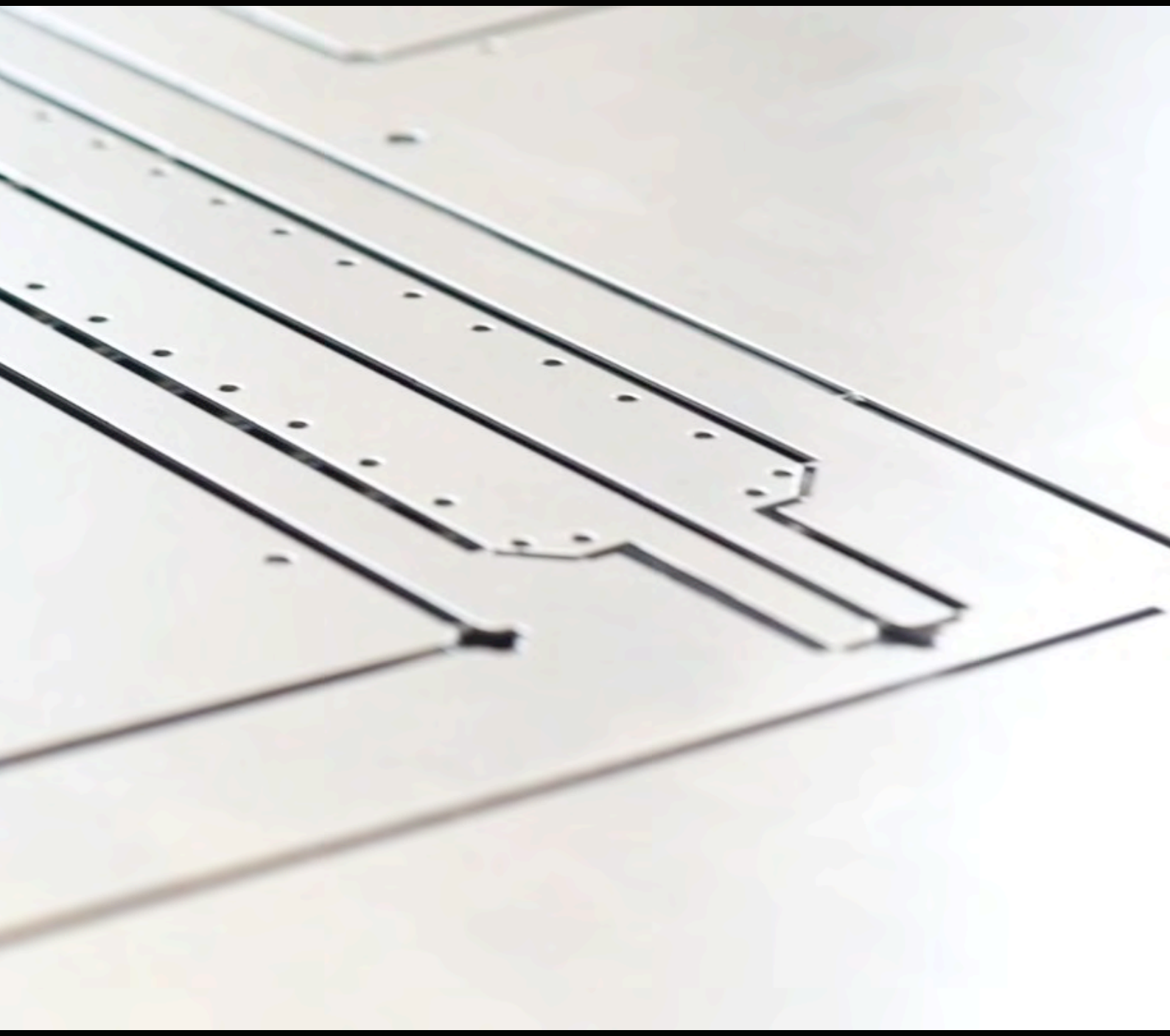

Durability

The enclosures have been designed by experienced engineers for ease of use and durability.

KT TERMINAL BOX

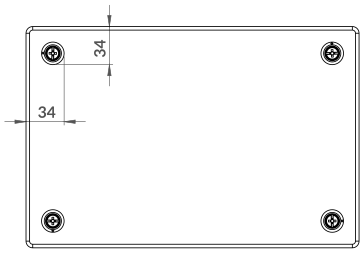

FRONT VIEW

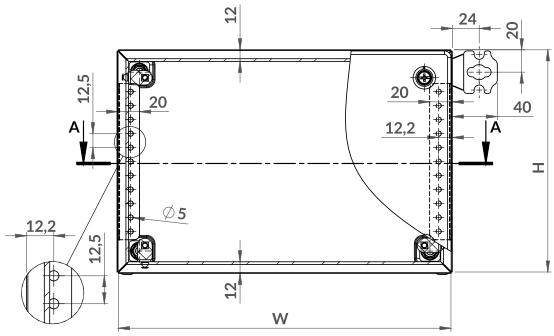

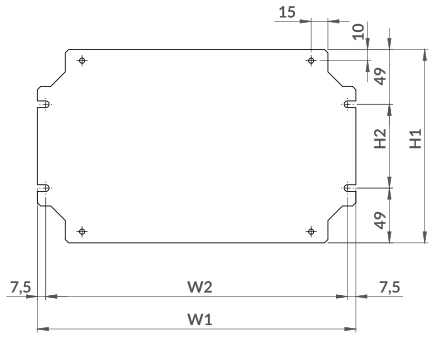

MOUNTING PLATE

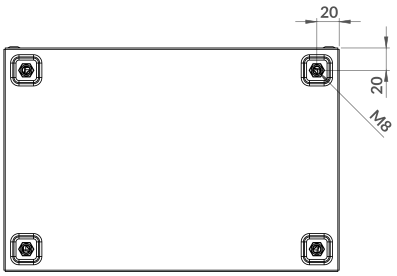

BACK VIEW

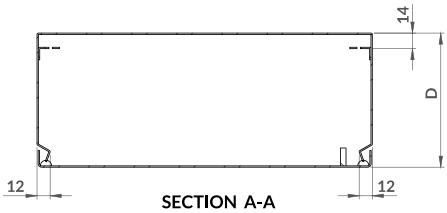

SECTION A-A

ENCLOSURE WIDTH (W)	W1	W2	ENCLOSURE HEIGHT (H)	H1	H2	ENCLOSURE DEPTH (D)
150	135	120	150	123	25	80
200	185	170	200	173	75	
300	285	270	300	273	175	120
400	385	370	400	373	275	
500	485	470				
600	585	570				
800	785	770				

KT BUS BOX

KT SOLID DOOR BUS BOX

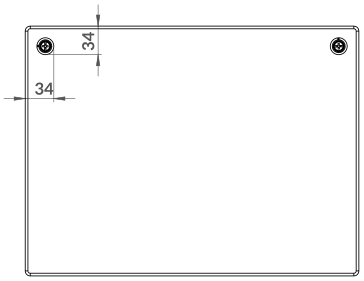

FRONT VIEW

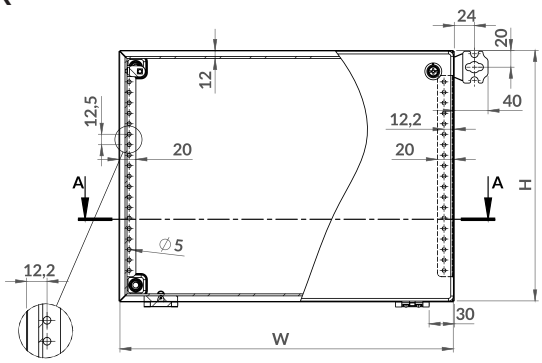

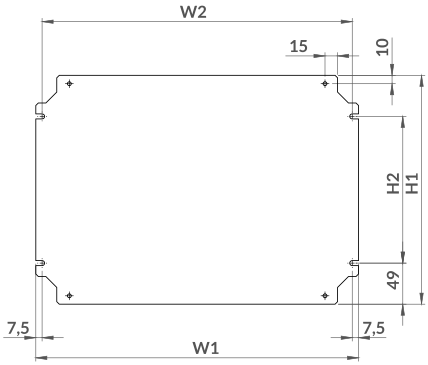

MOUNTING PLATE

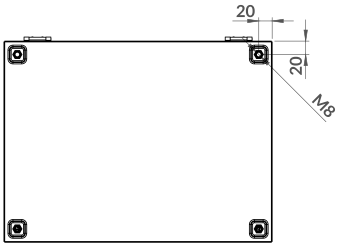

BACK VIEW

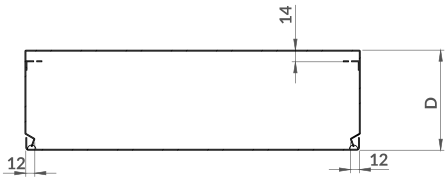

SECTION A-A

ENCLOSURE WIDTH (W)	W1	W2	ENCLOSURE HEIGHT (H)	H1	H2	ENCLOSURE DEPTH (D)
400	385	370	200	173	25	155
600	585	570	300	273	175	
800	785	770	-	-	-	-

KT GLAZED DOOR BUS BOX

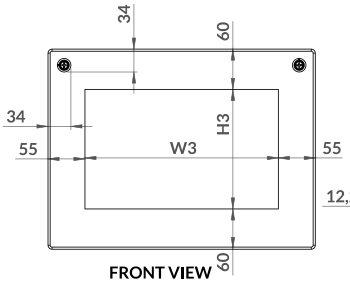

FRONT VIEW

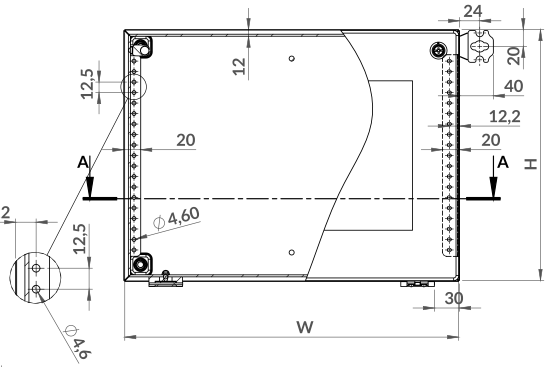

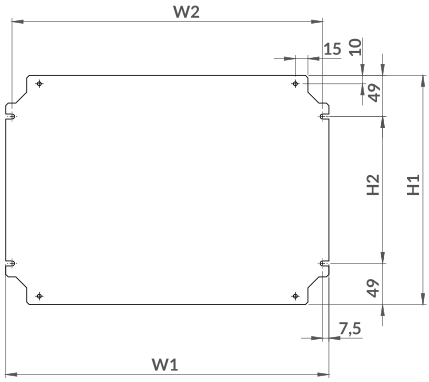

MOUNTING PLATE

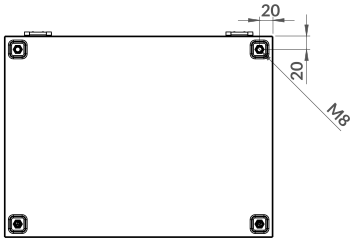

BACK VIEW

SECTION A-A

ENCLOSURE WIDTH (W)	W1	W2	W3	ENCLOSURE HEIGHT (H)	H1	H2	H2	ENCLOSURE DEPTH (D)
400	385	370	288	200	173	25	78	155
600	585	570	488	300	273	75	178	
800	785	770	688	-	-	-	-	-

DM-SMALL ENCLOSURE

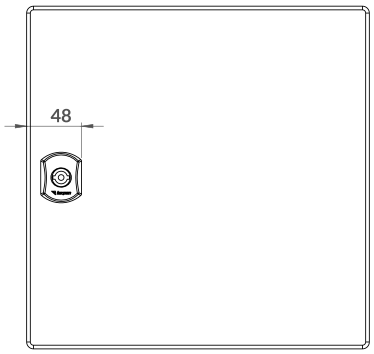

FRONT VIEW

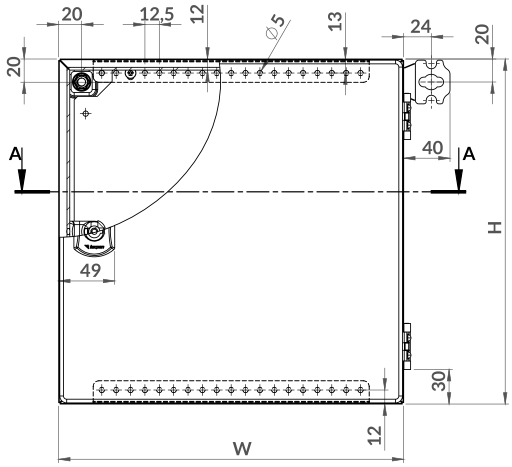

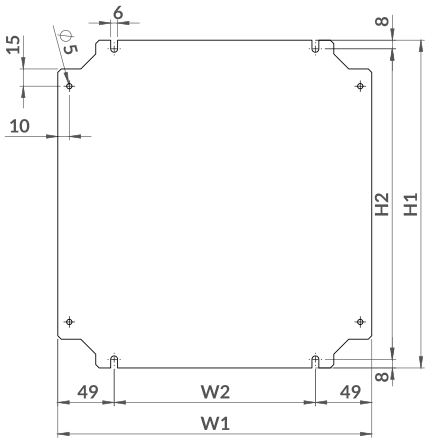

MOUNTING PLATE

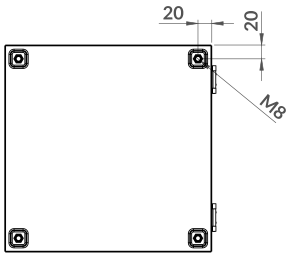

BACK VIEW

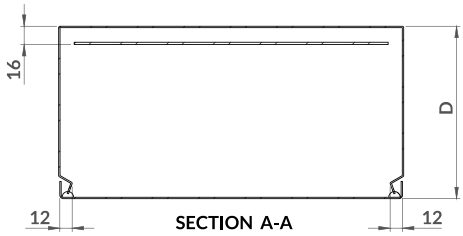

SECTION A-A

ENCLOSURE WIDTH (W)	W1	W2	ENCLOSURE HEIGHT (H)	H1	H2	ENCLOSURE DEPTH (D)
200	185	75	200	173	170	150
250	235	125	250	223	220	
300	285	175	300	273	270	-
400	385	275	400	373	370	

DM-MEDIUM SOLID DOOR ENCLOSURE

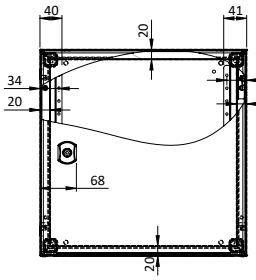

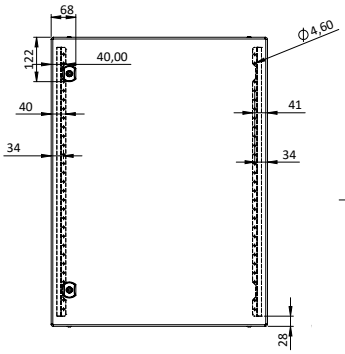

QUARTER TURN HANDLE LOCK
FRONT VIEW

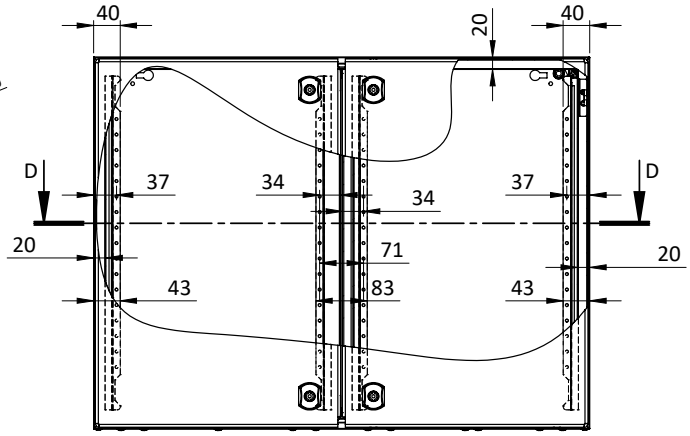

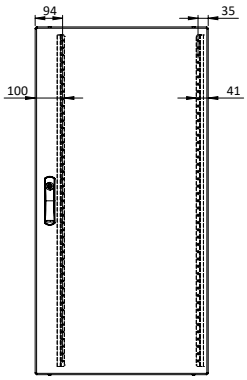

HANDLE LOCK DOOR
FRONT VIEW

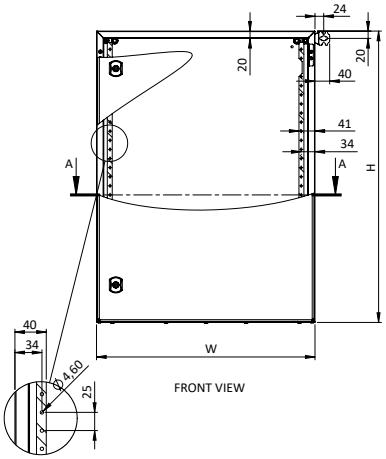

FRONT VIEW

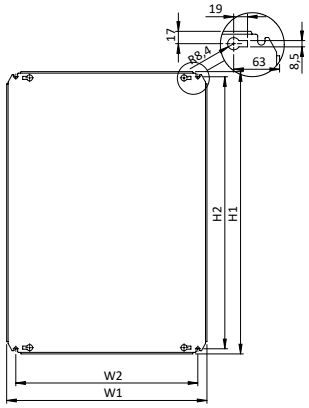

MOUNTING PLATE

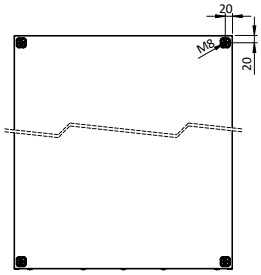

BACK VIEW

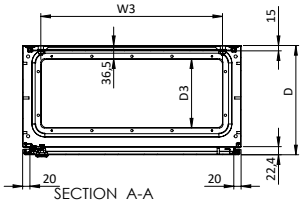

SECTION A-A

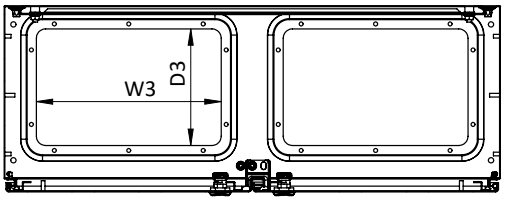

SECTION D-D

DM-MEDIUM DOUBLE-DOOR ENCLOSURE

ENCLOSURE WIDTH (W)	W1	W2	ENCLOSURE HEIGHT (H)	H1	H2	ENCLOSURE DEPTH (D)
250	200	150	300	275	247	150
300	250	200	350	325	297	210
400	350	300	400	375	347	260
500	450	400	500	475	447	300
600	550	500	600	575	547	400
800	750	700	700	675	647	-
-	-	-	800	775	747	-
-	-	-	1000	975	947	-
-	-	-	1200	1175	1147	-

DM-MEDIUM GLAND PLATE CUT-OUT DIMENSIONS			
ENCLOSURE WIDTH (W) x DEPTH (D)	W3 (mm)	D3 (mm)	NUMBER OF GLAND PLATES
300x210	200	115	1
400x210	300	115	1
400x260	300	115	1
400x300	300	190	1
500x210	400	115	1
500x260	400	115	1
500x300	400	190	1
600x210	500	115	1
600x260	500	115	1
600x300	500	190	1
600x400	500	190	1
800x210	300	115	2
800x260	300	115	2
800x300	300	115	2

DM-MEDIUM GLAZED DOOR ENCLOSURE

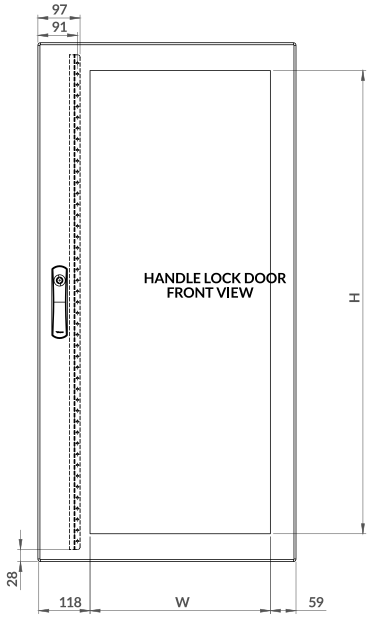

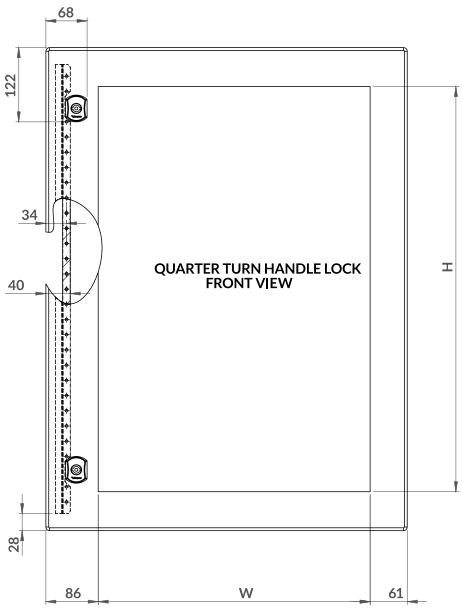

ENCLOSURE WIDTH (W)	ENCLOSURE HEIGHT (H)	W	H
400	500	247	366
400	600	247	466
500	600	347	466
500	700	347	566
600	600	447	466
600	800	447	666
600	1000	447	866
600	1200	415	1066
800	1000	647	866
800	1200	615	1066

DM-MEDIUM GLAND PLATE CUT-OUT DIMENSIONS			
ENCLOSURE WIDTH (W) x DEPTH (D)	W3 (mm)	D3 (mm)	NUMBER OF GLAND PLATES
400x210	300	115	1
400x260	300	115	1
400x300	300	190	1
500x210	400	115	1
500x260	400	115	1
500x300	400	190	1
600x210	500	115	1
600x260	500	115	1
600x300	500	190	1
600x400	500	190	1
800x210	300	115	2
800x260	300	115	2
800x300	300	115	2

DM-LARGE SOLID DOOR ENCLOSURE

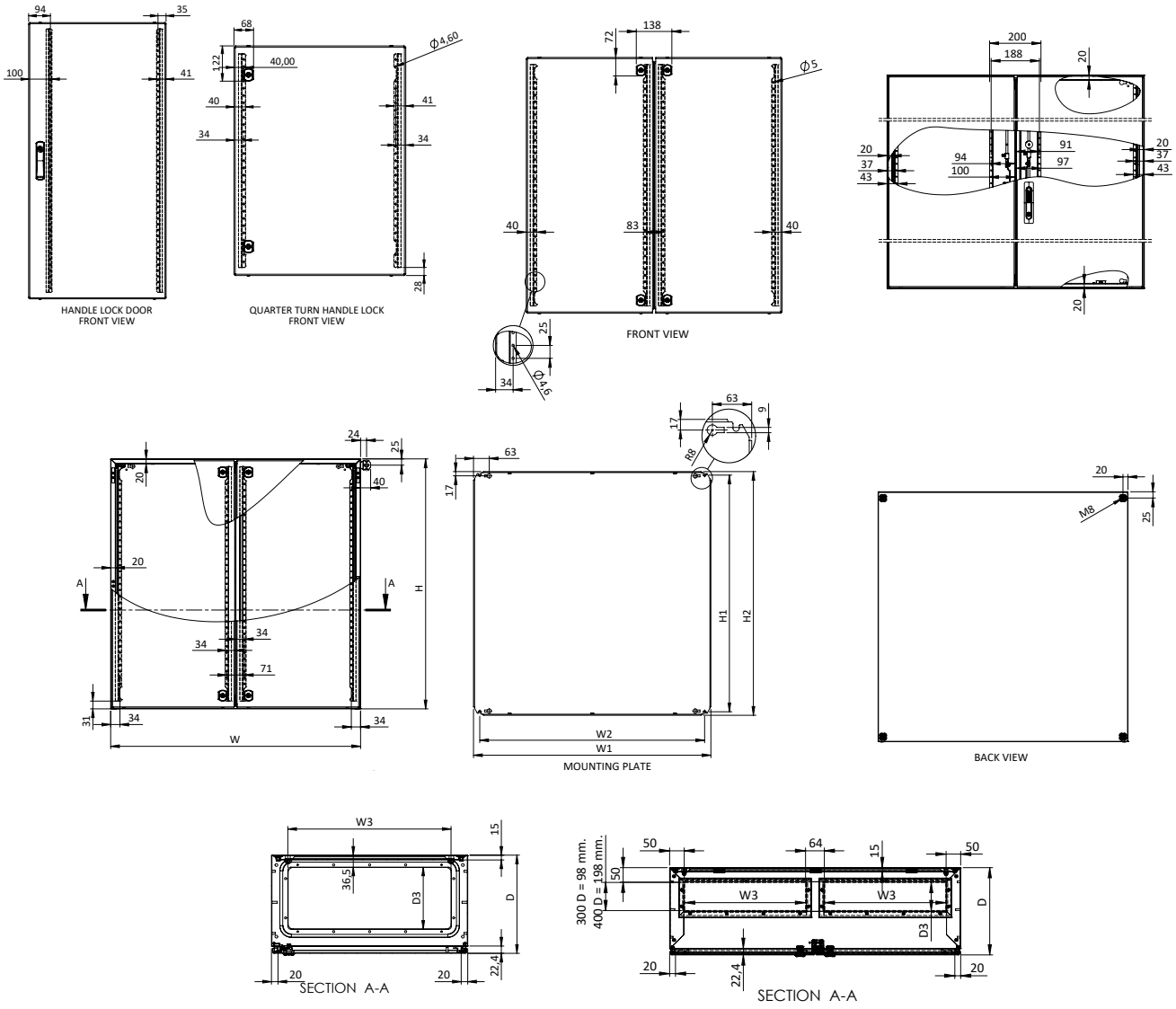

ENCLOSURE WIDTH (W)	W1	W2	ENCLOSURE HEIGHT (H)	H1	H2	ENCLOSURE DEPTH (D)
600	550	500	800	775	747	300
800	750	700	1000	975	947	
1000	950	900	1200	1175	1147	400
1200	1150	1100	1400	1375	1347	

DM-LARGE GLAND PLATE CUT-OUT DIMENSIONS			
ENCLOSURE WIDTH (W) x DEPTH (D)	W3 (mm)	D3 (mm)	NUMBER OF GLAND PLATES
600x400	500	199	1
800x400	700	199	1
1000x300	418	99	2
1000x 400	418	199	2
1200x300	518	99	2
1200x400	518	199	2

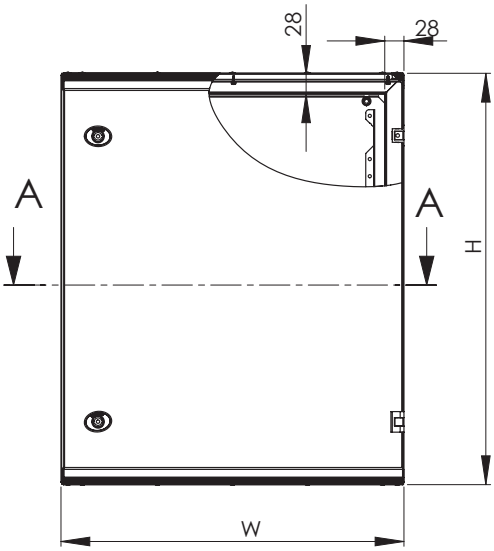

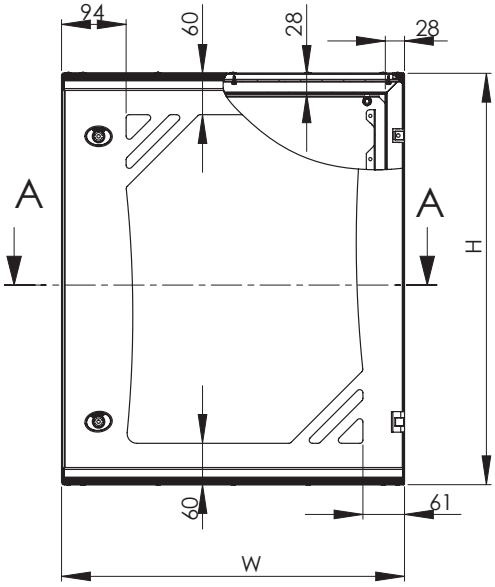

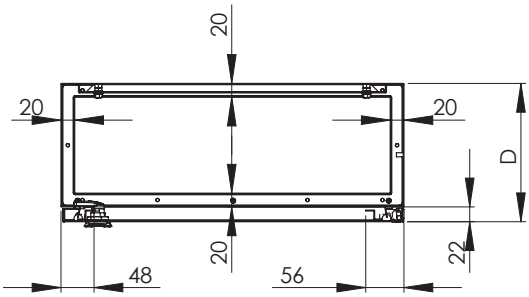

SECTION A-A

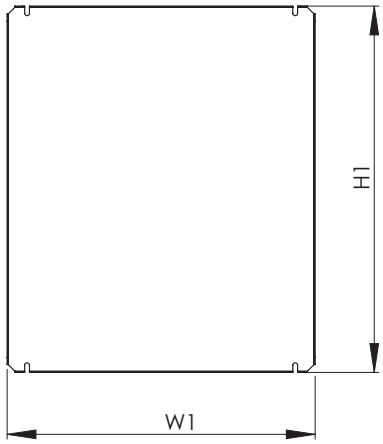

ENCLOSURE WIDTH	W	W1
300	300	249
400	400	349
500	500	449
600	600	549
800	800	749

ENCLOSURE DEPTH	D
150	150
200	200
280	280

ENCLOSURE HEIGHT	H	H1
400	400	334
500	500	434
600	600	534
700	700	634
800	800	734
1000	1000	934
1150	1150	1084

TEOS SERIES SINGLE DOOR

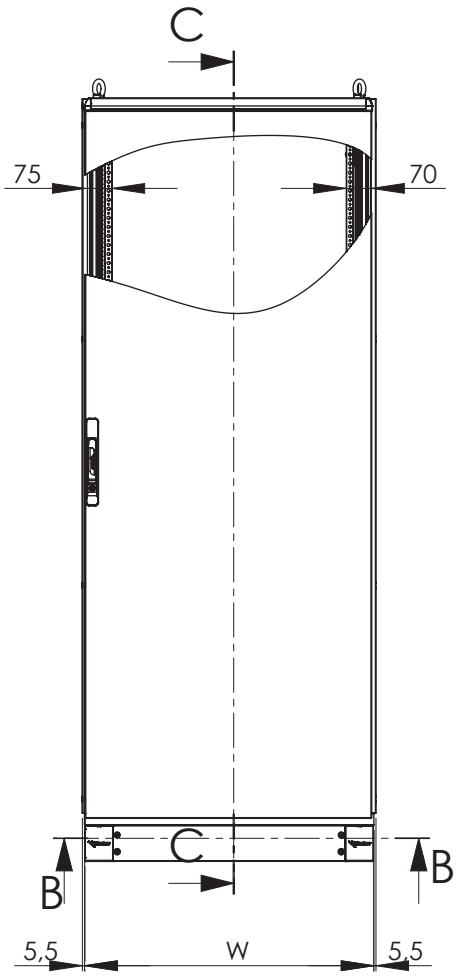

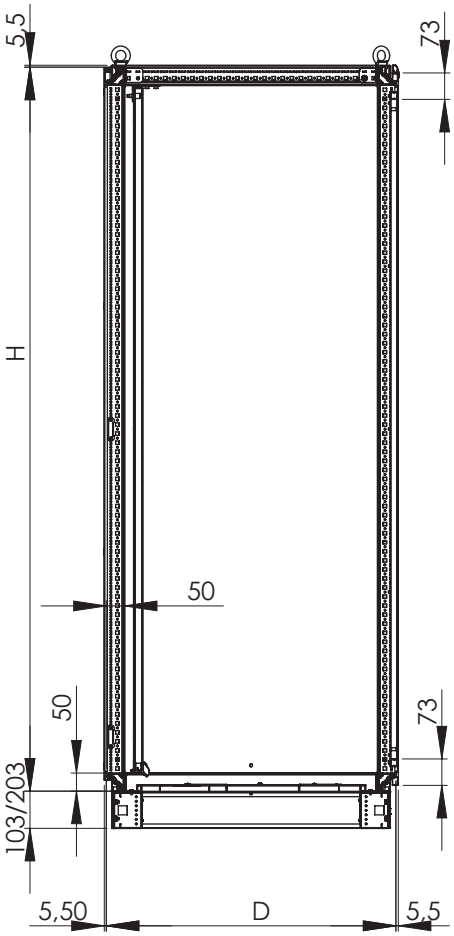

SECTION C-C

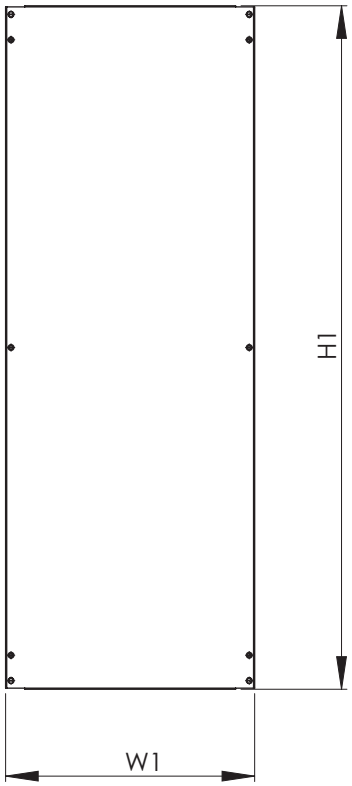

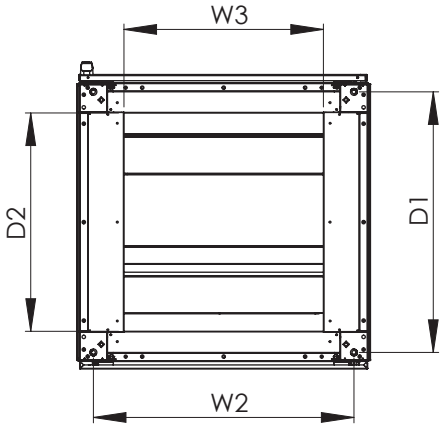

SECTION B-B

ENCLOSURE WIDTH	W	W1	W2	W3
400	400	-	320	151
500	500	388	420	251
600	600	488	520	351
700	700	588	620	451
800	800	688	720	551
1000	1000	888	920	444,5x2
1200	1200	1088	1120	544,5x2

ENCLOSURE DEPTH	D	D1	D2
400	400	320	203
500	500	420	303
600	600	520	403
700	700	620	503
800	800	720	603

ENCLOSURE HEIGHT	H	H1
1200	1200	1088
1600	1600	1488
1800	1800	1688
2000	2000	1888
2200	2200	2088

TEOS SERIES DOUBLE DOOR

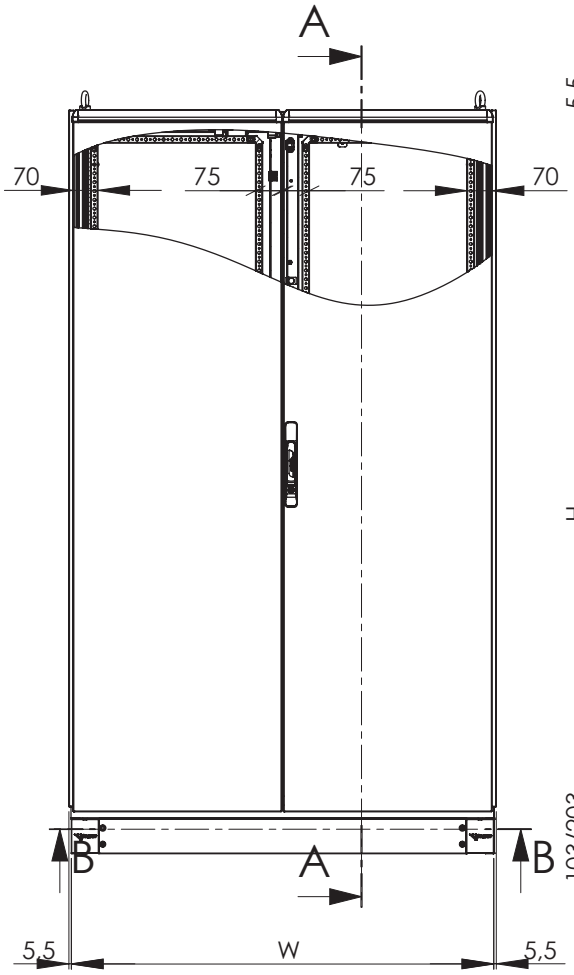

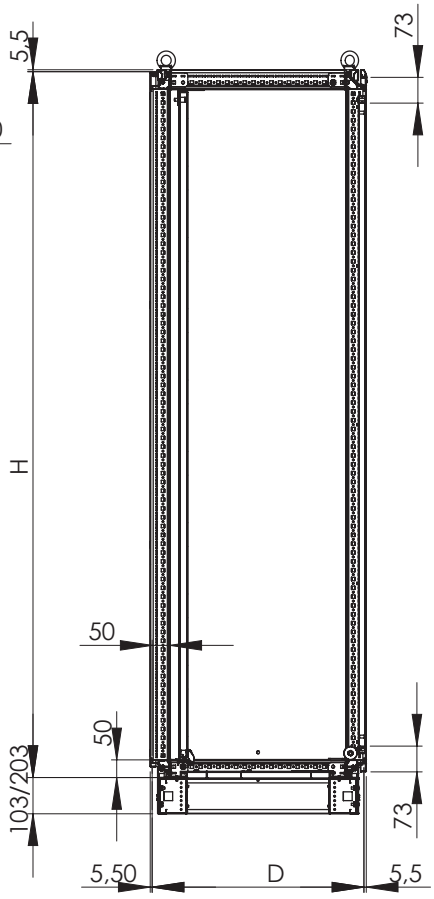

SECTION A-A

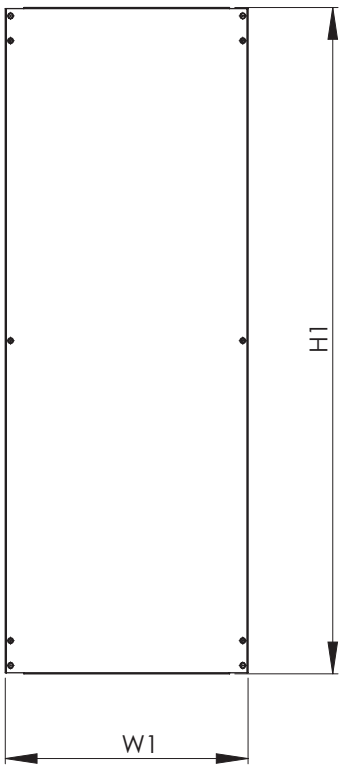

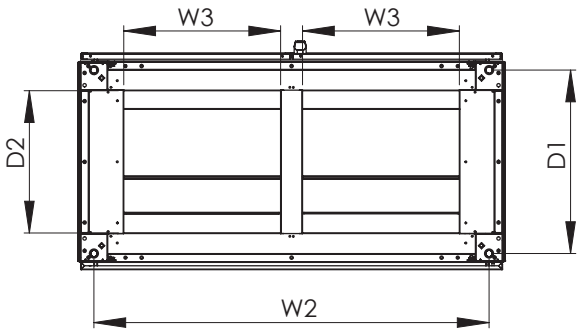

SECTION B-B

ENCLOSURE WIDTH	W	W1	W2	W3
400	400	-	320	151
500	500	388	420	251
600	600	488	520	351
700	700	588	620	451
800	800	688	720	551
1000	1000	888	920	444,5x2
1200	1200	1088	1120	544,5x2

ENCLOSURE DEPTH	D	D1	D2
400	400	320	203
500	500	420	303
600	600	520	403
700	700	620	503
800	800	720	603

ENCLOSURE HEIGHT	H	H1
1200	1200	1088
1600	1600	1488
1800	1800	1688
2000	2000	1888
2200	2200	2088

NEO MODULAR SERIES SINGLE DOOR

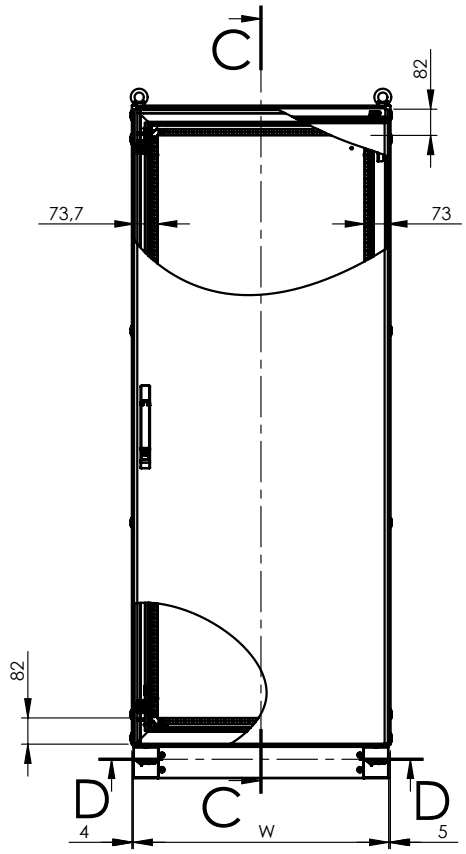

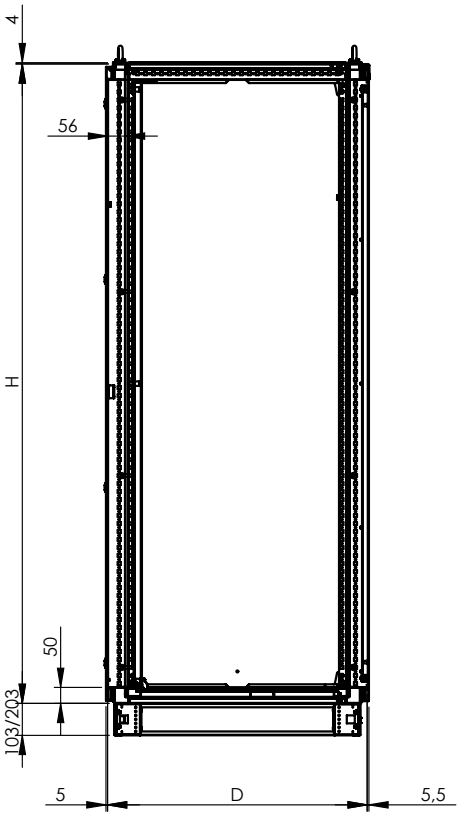

SECTION C-C

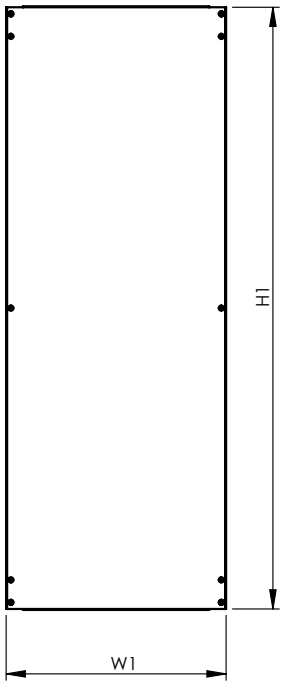

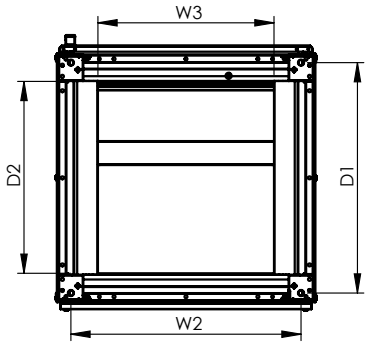

SECTION D-D

ENCLOSURE WIDTH	W	W1	W2	W3
400	400	-	320	151
600	600	488	520	351
800	800	688	720	551
1000	1000	888	920	344,5x2
1200	1200	1088	1120	544,5x2

ENCLOSURE DEPTH	D	D1	D2
400	370	320	203
500	470	420	303
600	570	520	403
800	770	720	603

ENCLOSURE HEIGHT	H	H1
1200	1200	1088
1600	1600	1488
1800	1800	1688
2000	2000	1888

NEO MODULAR SERIES DOUBLE DOOR

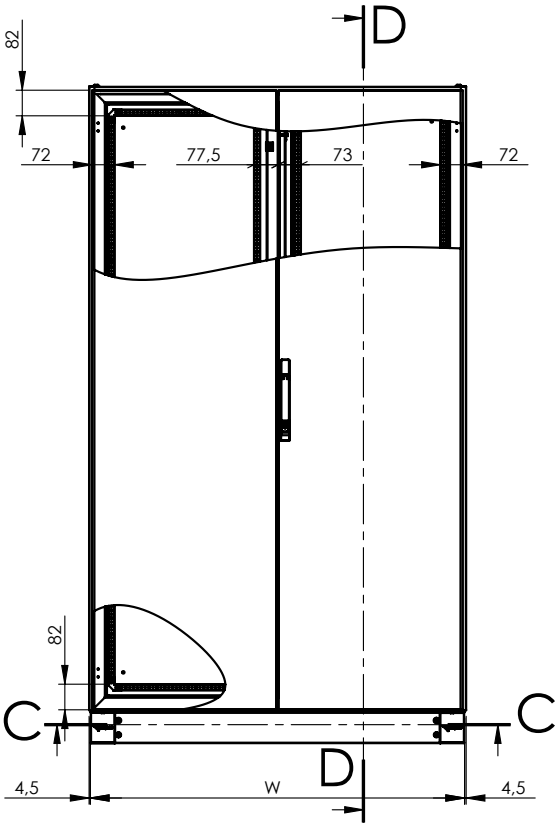

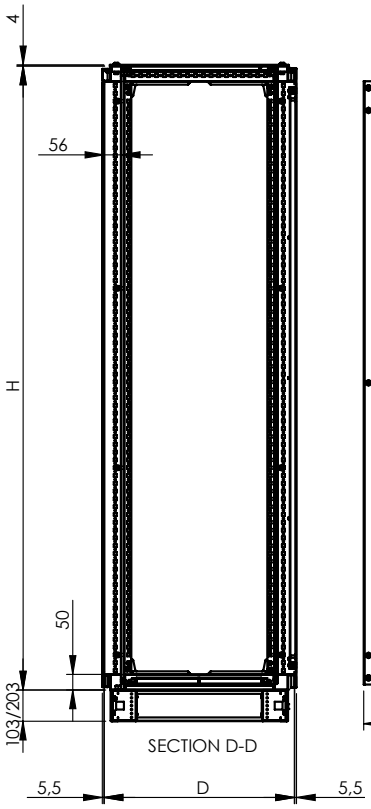

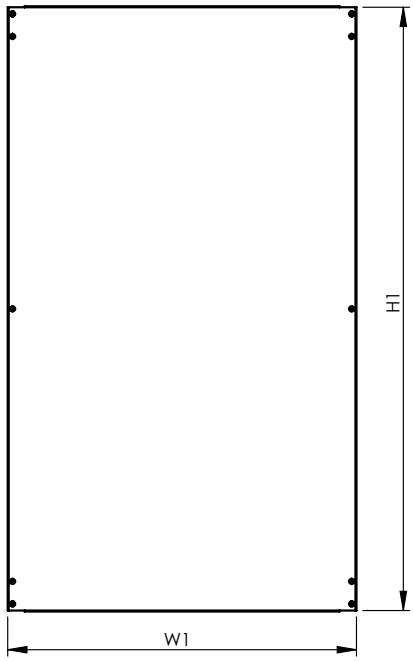

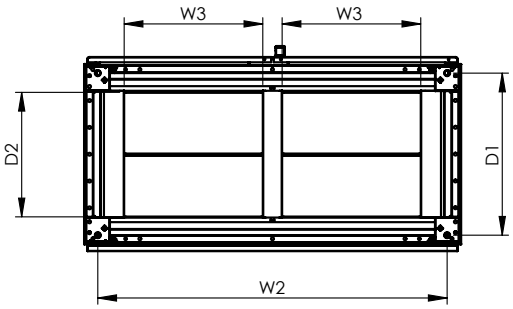

SECTION B-B

ENCLOSURE WIDTH	W	W1	W2	W3
400	400	-	320	151
600	600	488	520	351
800	800	688	720	551
1000	1000	888	920	344,5x2
1200	1200	1088	1120	444,5x2

ENCLOSURE DEPTH	D	D1	D2
400	370	320	203
500	470	420	303
600	570	520	403
800	770	720	603

ENCLOSURE HEIGHT	H	H1
1200	1200	1088
1600	1600	1488
1800	1800	1688
2000	2000	1888

NEO MONOBLOCK SERIES SINGLE DOOR

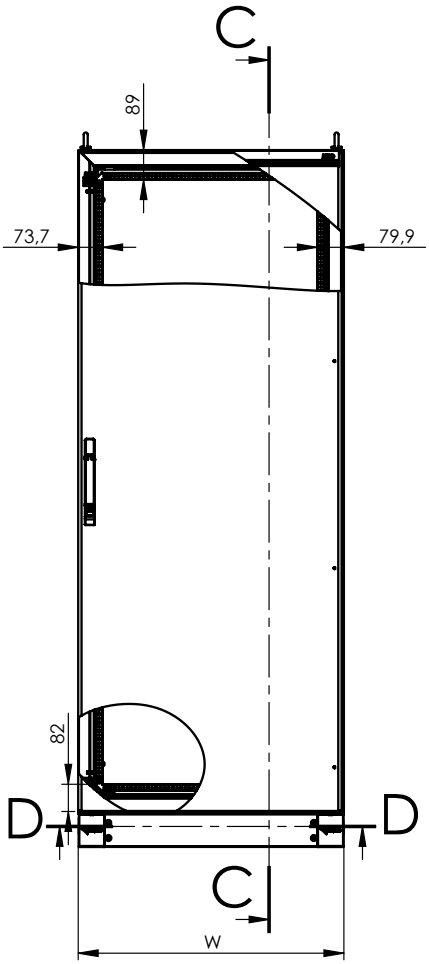

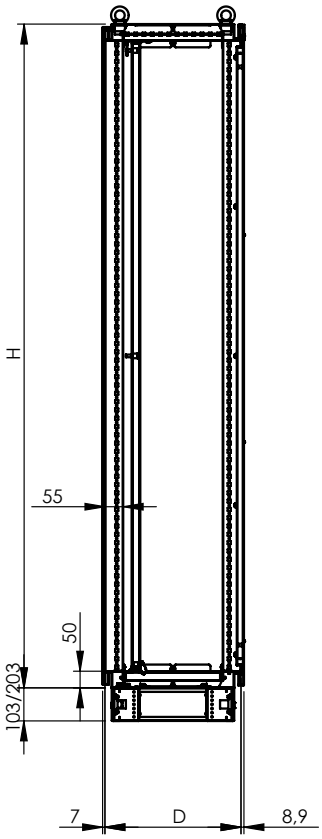

SECTION C-C

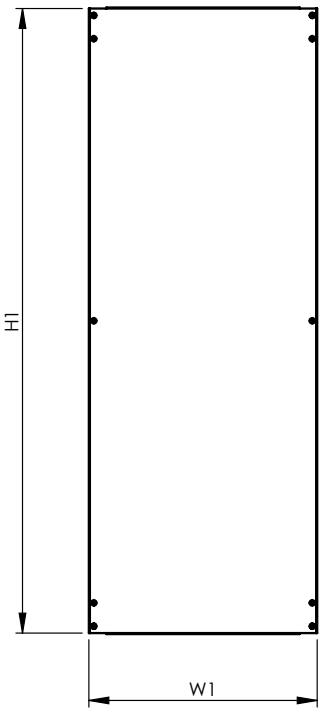

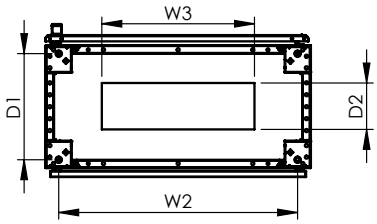

SECTION D-D

ENCLOSURE WIDTH	W	W1	W2	W3
600	600	488	520	260
800	800	688	720	460
1000	1000	888	920	260x2
1200	1200	1088	1120	360x2

ENCLOSURE DEPTH	D	D1	D2
400	370	320	140
500	470	420	140
600	570	520	140

ENCLOSURE HEIGHT	H	H1
1200	1200	1088
1600	1600	1488
1800	1800	1688
2000	2000	1888

NEO MONOBLOCK SERIES DOUBLE DOOR

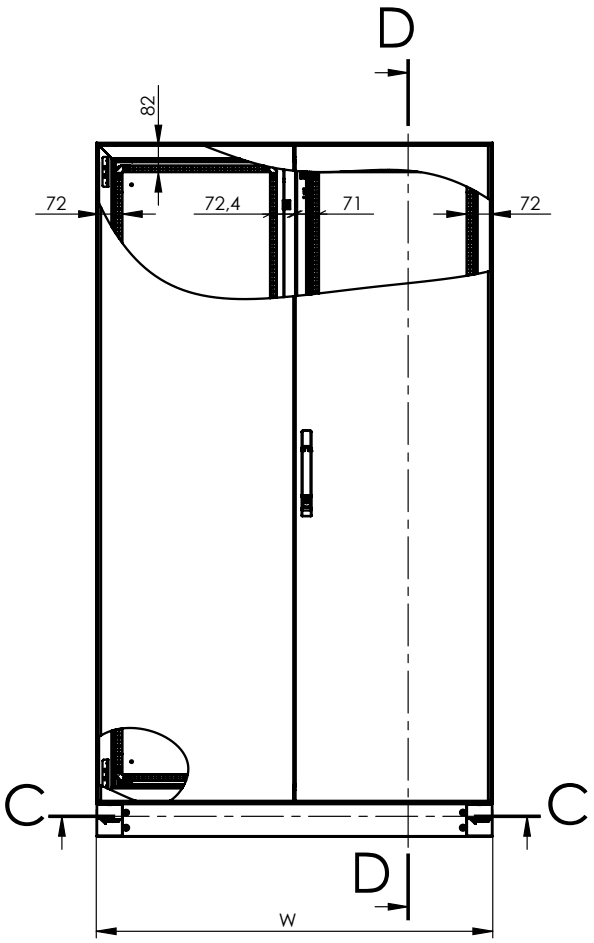

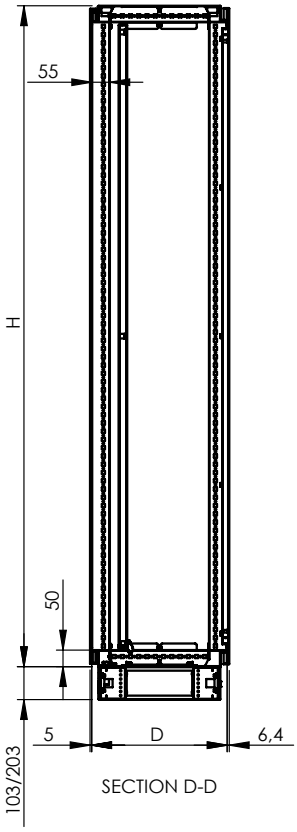

SECTION D-D

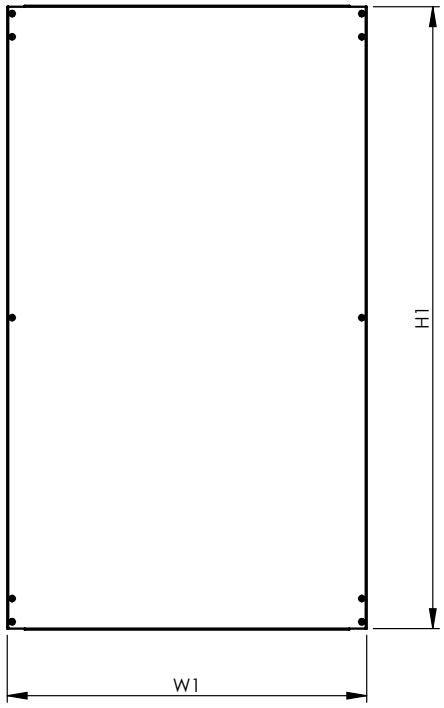

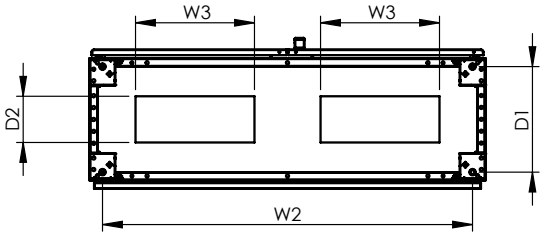

SECTION C-C

ENCLOSURE WIDTH	W	W1	W2	W3
600	600	488	520	351
800	800	688	720	551
1000	1000	888	920	260x2
1200	1200	1088	1120	360x2

ENCLOSURE DEPTH	D	D1	D2
400	370	320	140
500	470	420	140
600	570	520	140

ENCLOSURE HEIGHT	H	H1
1200	1200	1088
1600	1600	1488
1800	1800	1688
2000	2000	1888

NEO HC MONOBLOCK SERIES SINGLE DOOR (CLOSED SIDE)

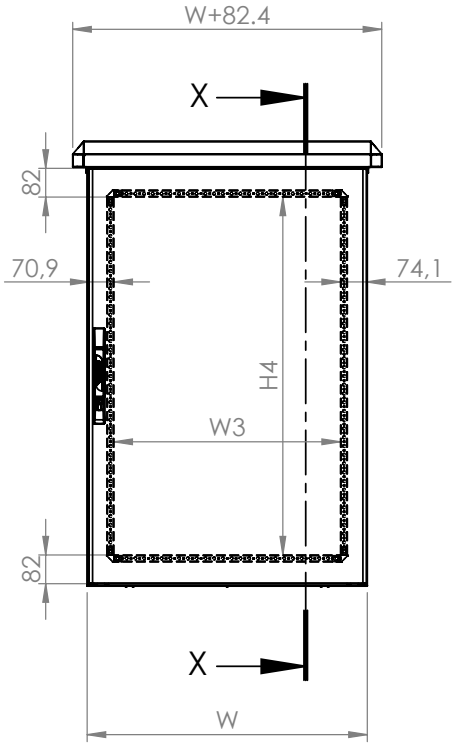

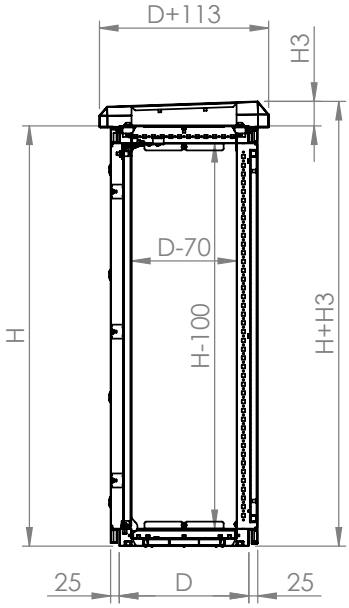

SECTION X-X

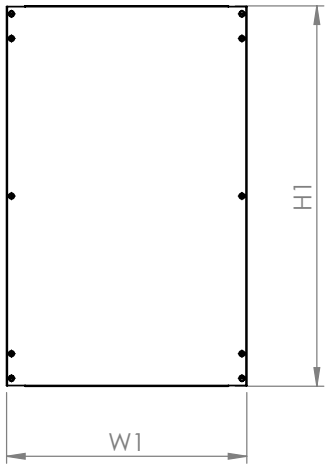

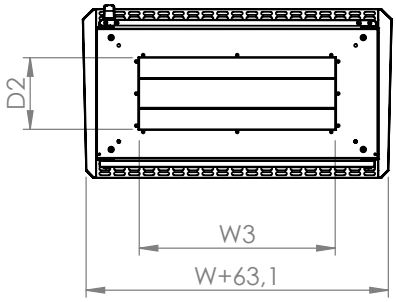

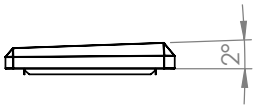

ENCLOSURE WIDTH	W1	W2	W3
600	600	488	447
800	800	688	647
1200	1200	1088	447

ENCLOSURE DEPTH	D	D2
400	370	204,4
600	570	404,4

ENCLOSURE HEIGHT	H	H1	H4
1200	1200	1088	1222

ENCLOSURE DEPTH	H3
400	70
600	77

NEO HC MONOBLOCK SERIES DOUBLE DOOR (CLOSED SIDE)

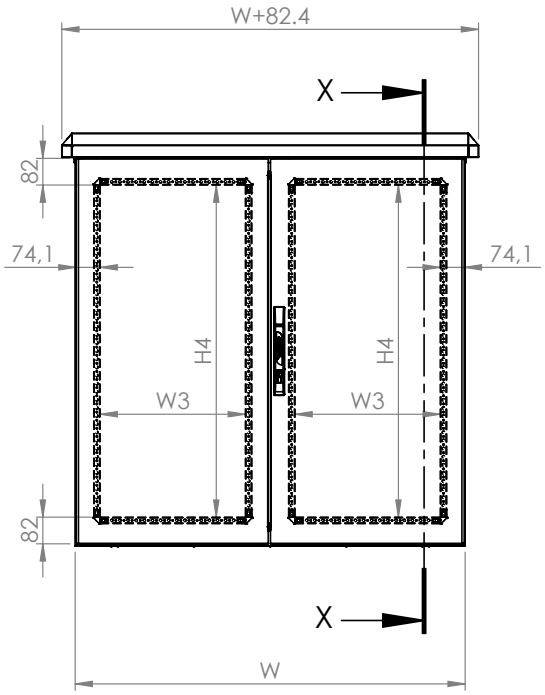

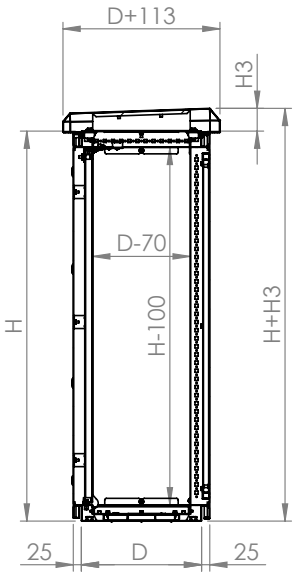

SECTION X-X

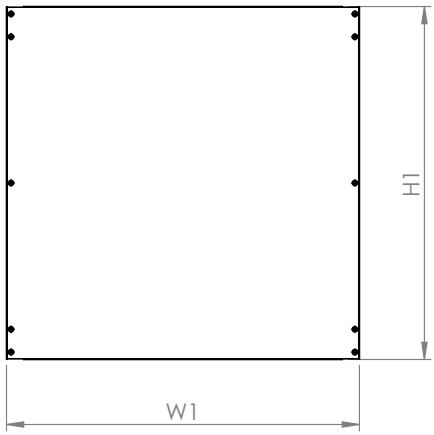

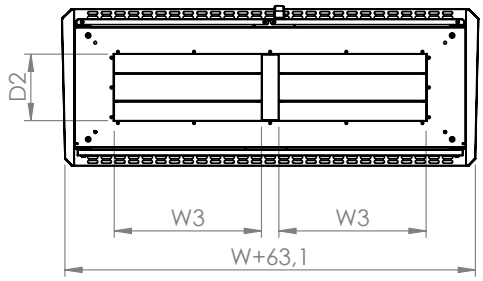

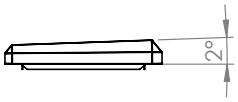

ENCLOSURE WIDTH	W1	W2	W3
600	600	488	447
800	800	688	647
1200	1200	1088	447

ENCLOSURE DEPTH	D	D2
400	370	204,4
600	570	404,4

ENCLOSURE HEIGHT	H	H1	H4
1200	1200	1088	1222

ENCLOSURE DEPTH	H3
400	70
600	77

NEO HC MONOBLOCK SERIES SINGLE DOOR (FILTER CUT OUT)

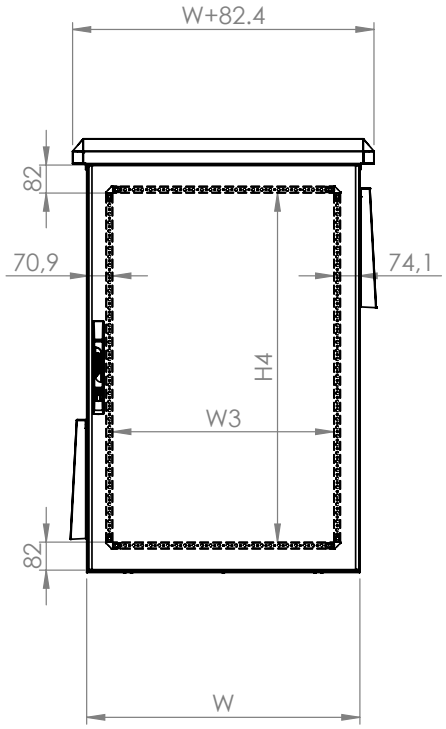

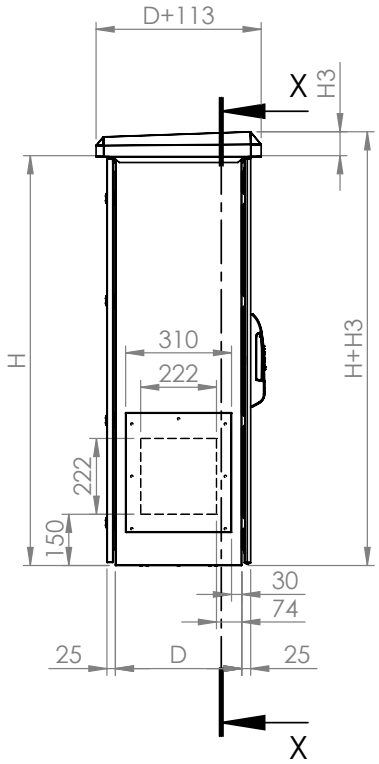

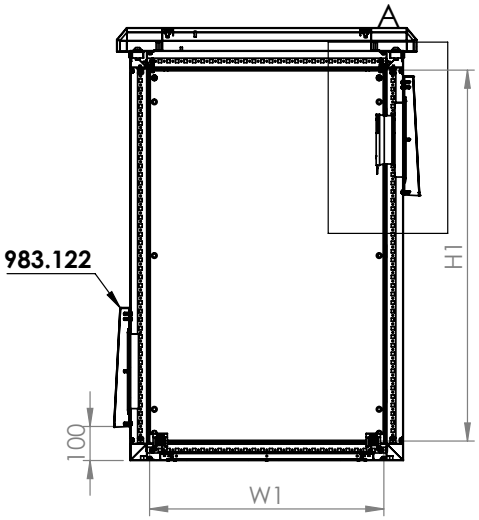

SECTION X-X

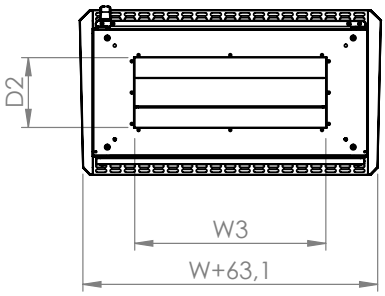

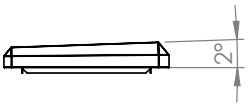

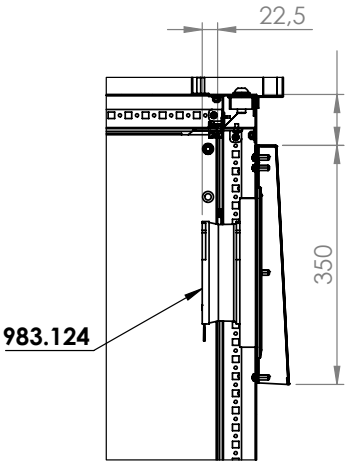

DETAIL A
SCALE 1 : 10

ENCLOSURE WIDTH	W1	W2	W3
600	600	488	447
800	800	688	647
1200	1200	1088	447

ENCLOSURE DEPTH	D	D2
400	370	204,4
600	570	404,4

ENCLOSURE HEIGHT	H	H1	H4
1200	1200	1088	1222

ENCLOSURE DEPTH	H3
400	70
600	77

NEO HC MONOBLOCK SERIES DOUBLE DOOR (FILTER CUT OUT)

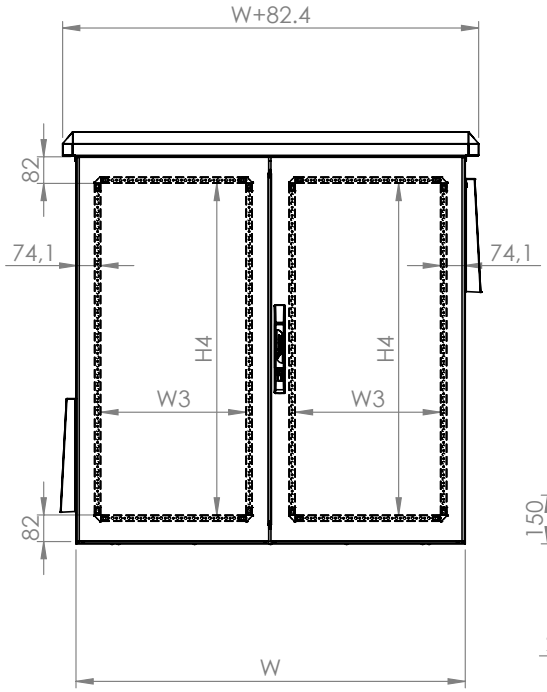

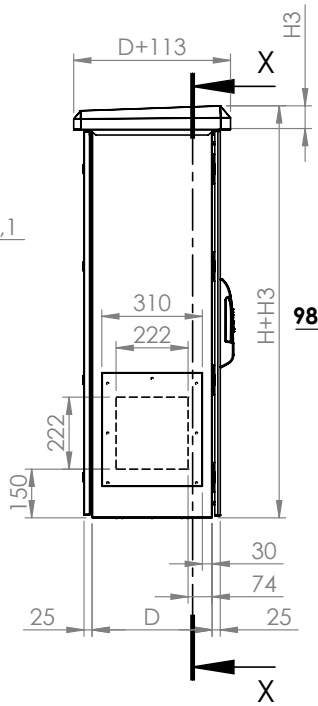

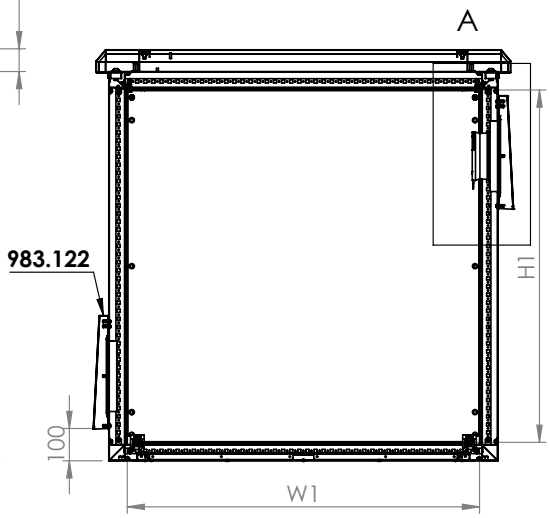

SECTION X-X

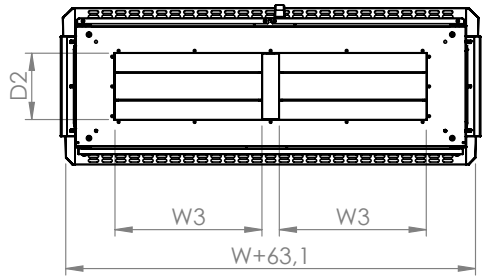

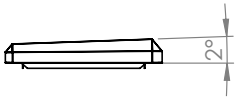

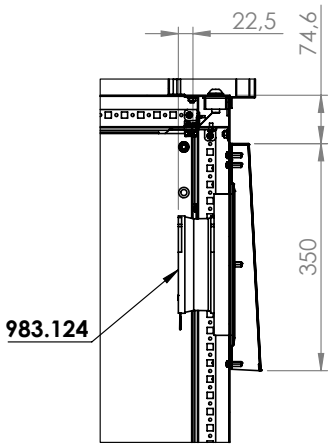

DETAIL A
SCALE 1 : 10

ENCLOSURE WIDTH	W1	W2	W3
600	600	488	447
800	800	688	647
1200	1200	1088	447

ENCLOSURE DEPTH	D	D2
400	370	204,4
600	570	404,4

ENCLOSURE HEIGHT	H	H1	H4
1200	1200	1088	1222

ENCLOSURE DEPTH	H3
400	70
600	77

NEO HC MODULAR SERIES SINGLE DOOR (CLOSED SIDE)

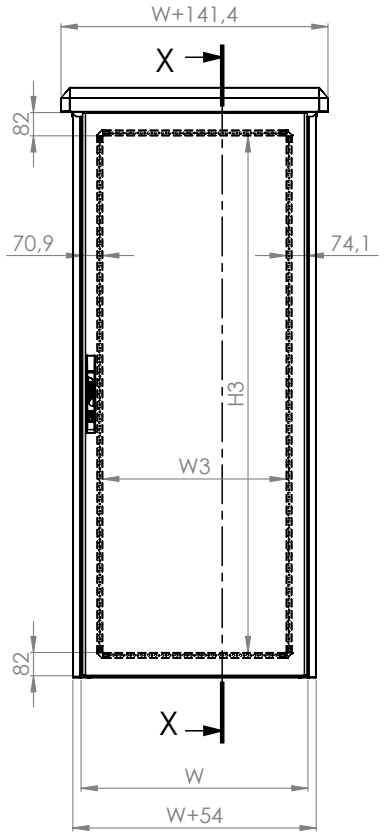

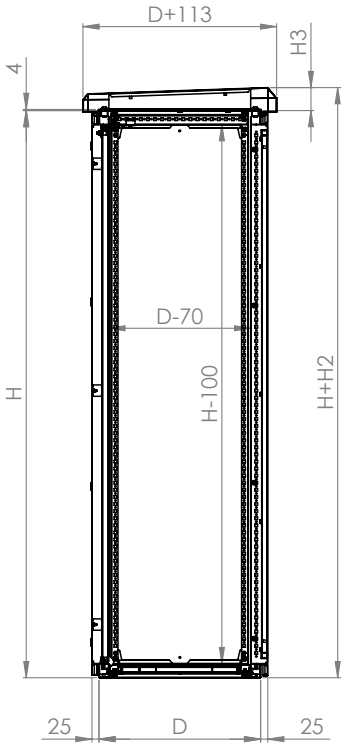

SECTION X-X

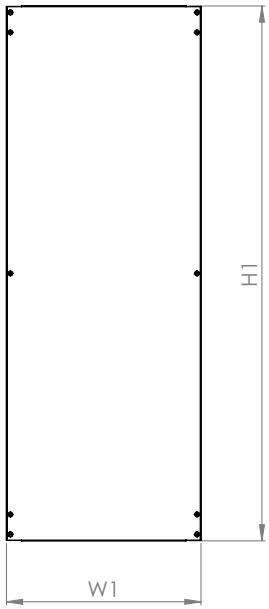

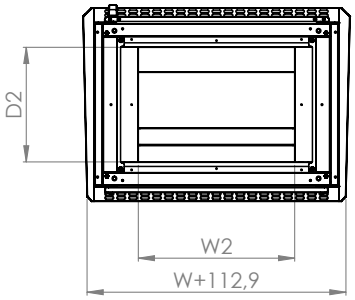

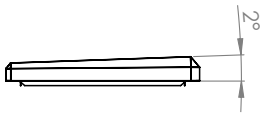

ENCLOSURE WIDTH	W	W1	W2	W3
400	400	288	151	247
600	600	488	351	447
700	700	588	451	547
800	800	688	551	647
1000	1000	888	344,6x2	347
1200	1200	1088	444,6x2	447

ENCLOSURE DEPTH	D	D2
400	370	331
600	570	531
800	770	731

ENCLOSURE DEPTH	H3
400	74
600	81
800	91

ENCLOSURE HEIGHT	H	H1	H4
1200	1200	1088	1222
1600	1600	1688	1622
2000	2000	1888	1822

NEO HC MODULAR SERIES DOUBLE DOOR (CLOSED SIDE)

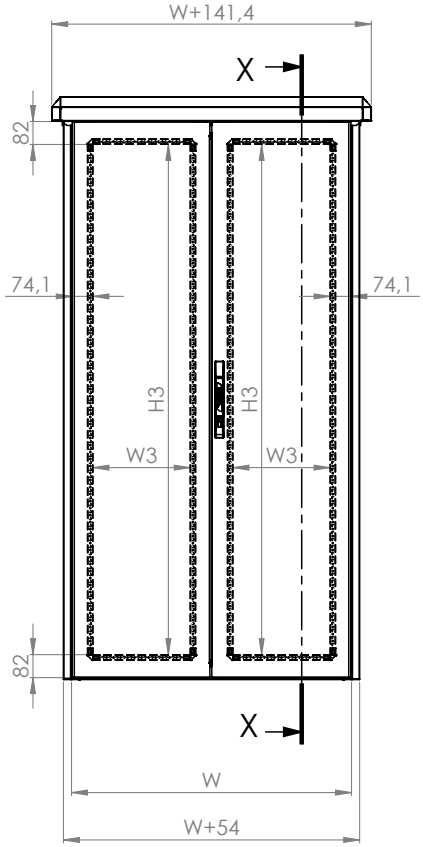

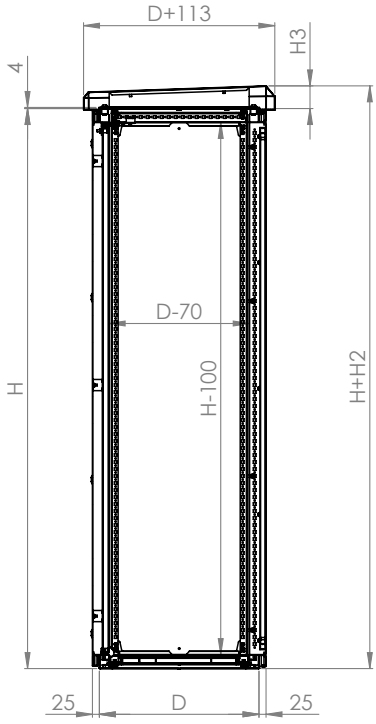

SECTION X-X

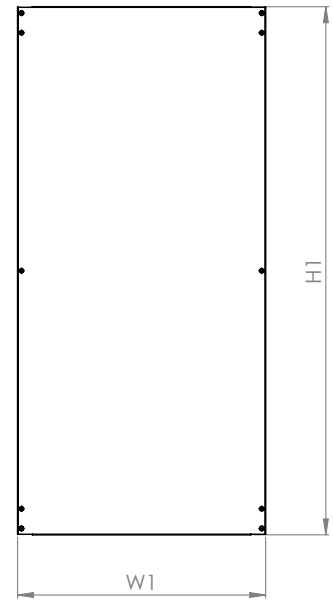

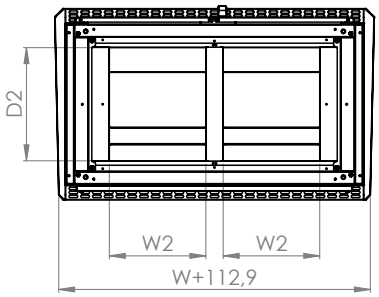

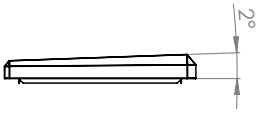

ENCLOSURE WIDTH	W	W1	W2	W3
400	400	288	151	247
600	600	488	351	447
700	700	588	451	547
800	800	688	551	647
1000	1000	888	344,6x2	347
1200	1200	1088	444,6x2	447

ENCLOSURE DEPTH	D	D2
400	370	331
600	570	531
800	770	731

ENCLOSURE DEPTH	H3
400	74
600	81
800	91

ENCLOSURE HEIGHT	H	H1	H4
1200	1200	1088	1222
1600	1600	1688	1622
2000	2000	1888	1822

NEO HC MODULAR SERIES SINGLE DOOR (FILTER CUT OUT)

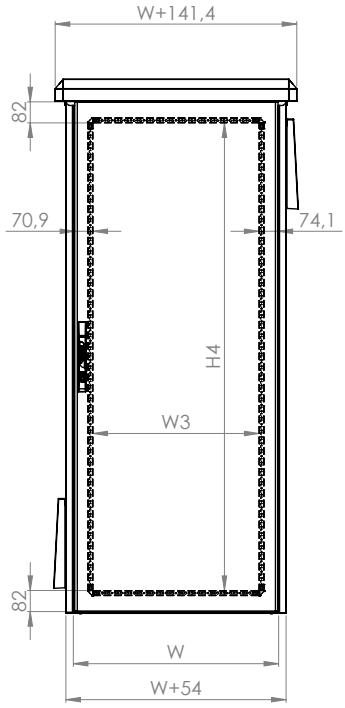

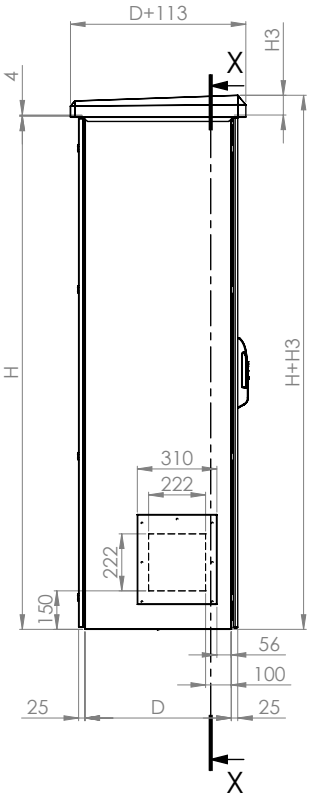

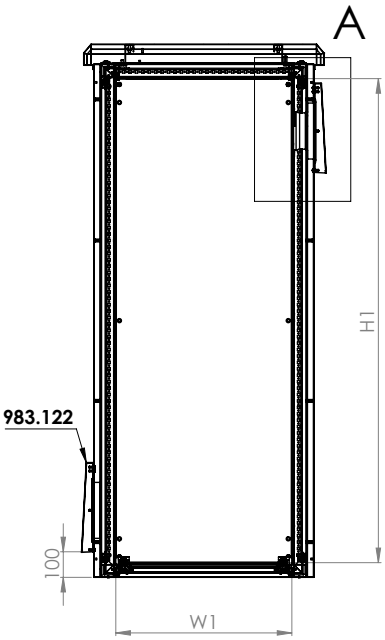

SECTION X-X

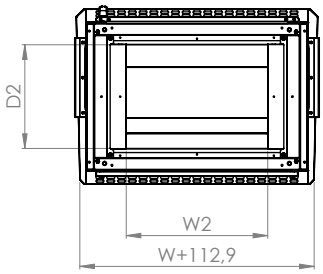

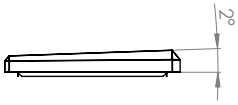

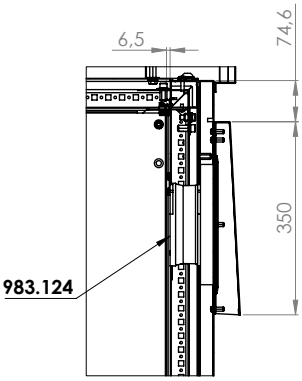

DETAIL A

SCALE 1 : 10

ENCLOSURE WIDTH	W	W1	W2	W3
400	400	288	151	247
600	600	488	351	447
700	700	588	451	547
800	800	688	551	647
1000	1000	888	344,6x2	347
1200	1200	1088	444,6x2	447

ENCLOSURE DEPTH	D	D2
400	370	331
600	570	531
800	770	731

ENCLOSURE DEPTH	H3
400	74
600	81
800	91

ENCLOSURE HEIGHT	H	H1	H4
1200	1200	1088	1222
1600	1600	1688	1622
2000	2000	1888	1822

NEO HC MODULAR SERIES DOUBLE DOOR (FILTER CUT OUT)

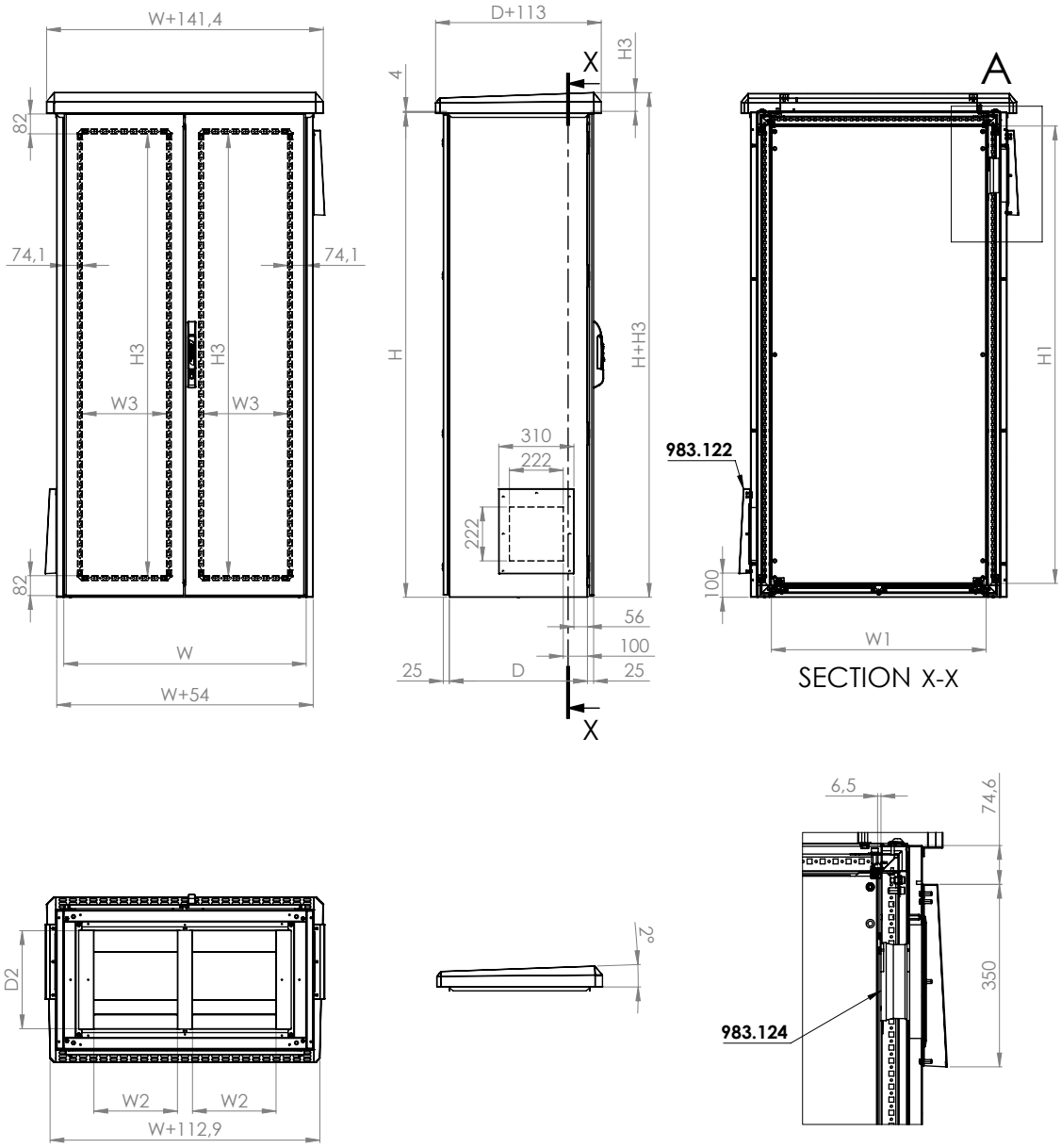

ENCLOSURE WIDTH	W	W1	W2	W3
400	400	288	151	247
600	600	488	351	447
700	700	588	451	547
800	800	688	551	647
1000	1000	888	344,6x2	347
1200	1200	1088	444,6x2	447

ENCLOSURE DEPTH	D	D2
400	370	331
600	570	531
800	770	731

ENCLOSURE DEPTH	H3
400	74
600	81
800	91

ENCLOSURE HEIGHT	H	H1	H4
1200	1200	1088	1222
1600	1600	1688	1622
2000	2000	1888	1822

KT SERIES STAINLESS STEEL

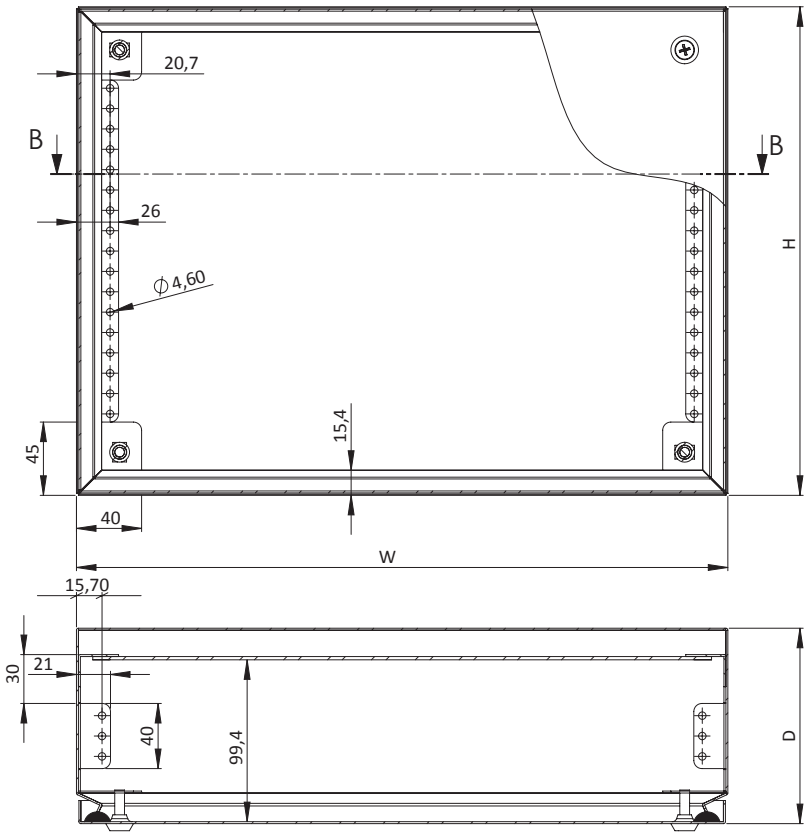

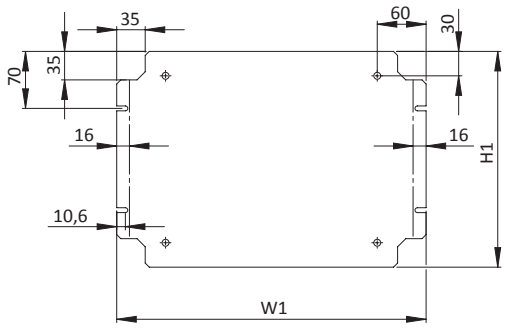

ENCLOSURE WIDTH	W	W1
200	200	180
300	300	280
400	400	380

ENCLOSURE DEPTH	D
120	120
120	120
120	120

ENCLOSURE HEIGHT	H	H1
200	200	165
300	300	265
400	400	365

DM SERIES STAINLESS STEEL

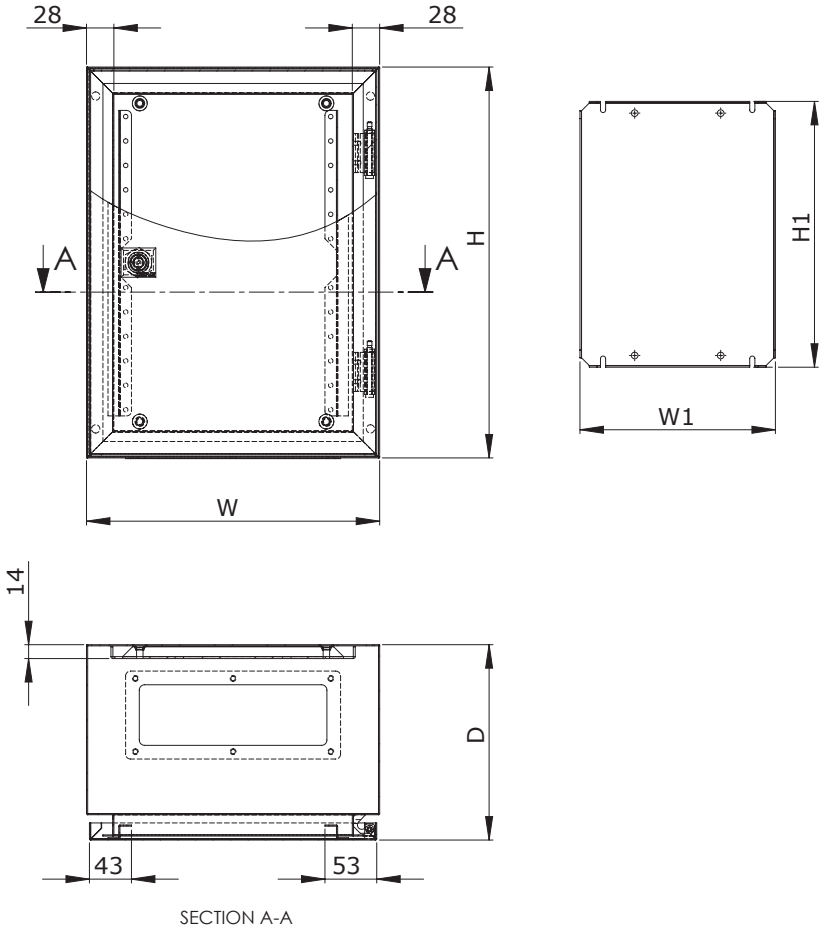

ENCLOSURE WIDTH	W	W1
200	200	150
300	300	250
400	400	350
500	500	450
600	600	550
800	800	750
1000	1000	950

ENCLOSURE DEPTH	D
150	150
200	200
280	280

ENCLOSURE HEIGHT	H	H1
300	300	240
400	400	340
500	500	440
600	600	540
800	800	640
1000	1000	740

DT SERIES STAINLESS STEEL SINGLE DOOR

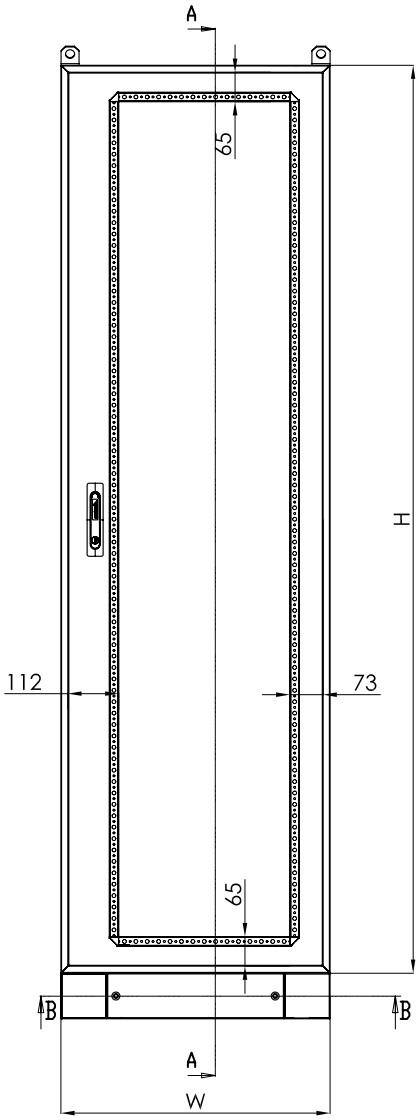

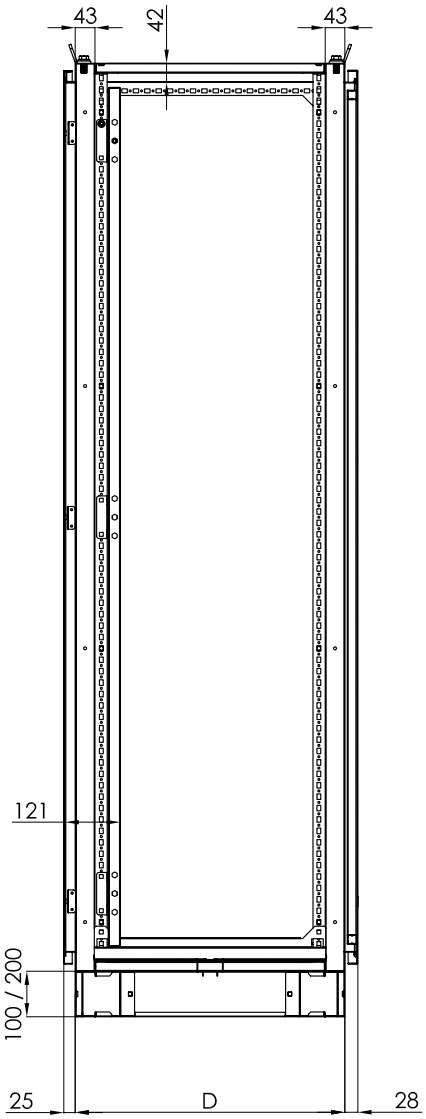

SECTION A-A

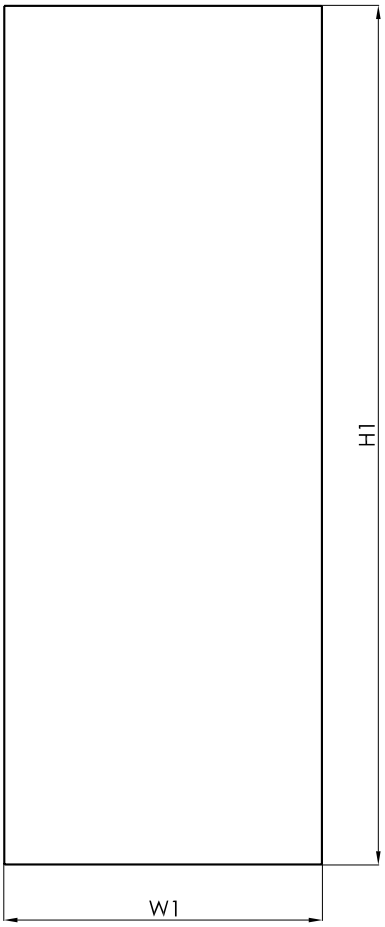

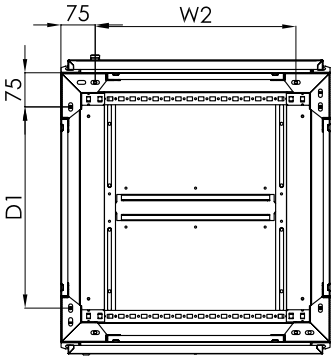

SECTION B-B

ENCLOSURE WIDTH	W	W1	W2
600	590	480	440
800	800	698	650
1000	990	888	840
1200	1190	1088	1040

ENCLOSURE DEPTH	D	D2
400	390	420
500	490	340
600	590	440
800	790	640

ENCLOSURE HEIGHT	H	H1
1200	1190	1084
1600	1600	1494
1800	1800	1694
2000	1990	1884
2200	2200	2094

DT SERIES STAINLESS STEEL DOUBLE DOOR

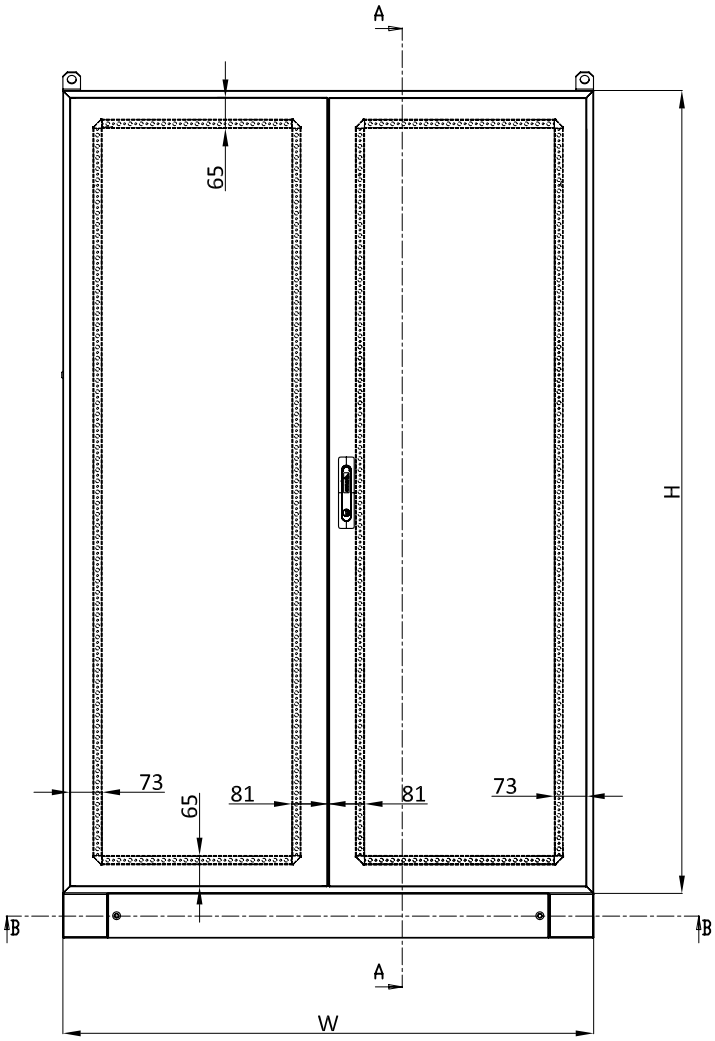

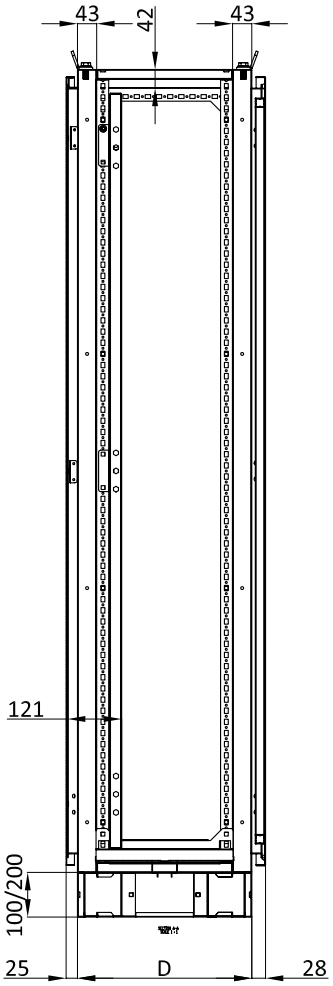

SECTION A-A

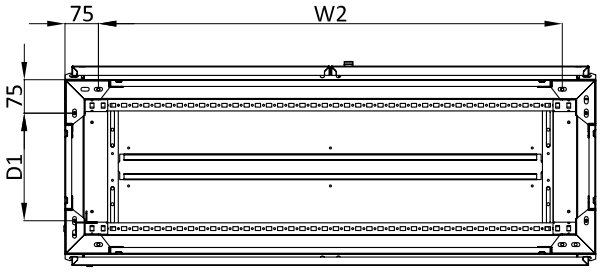

ENCLOSURE WIDTH	W	W1	W2
600	590	480	440
800	800	698	650
1000	990	888	840
1200	1190	1088	1040

ENCLOSURE DEPTH	D	D2
400	390	420
500	490	340
600	590	440
800	790	640

ENCLOSURE HEIGHT	H	H1
1200	1190	1084
1600	1600	1494
1800	1800	1694
2000	1990	1884
2200	2200	2094

KMT-1000 SERIES

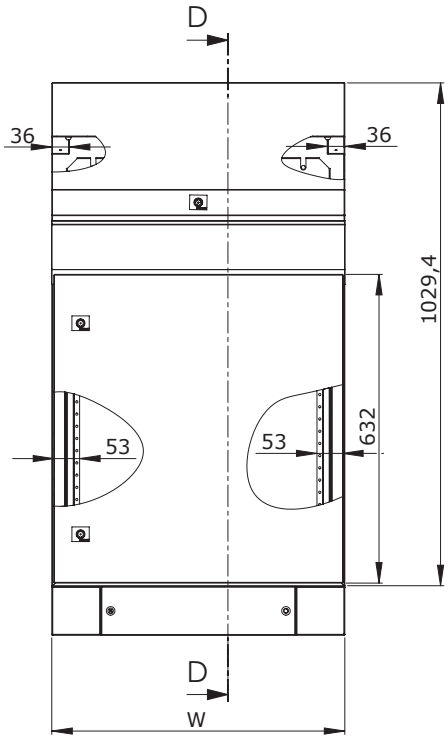

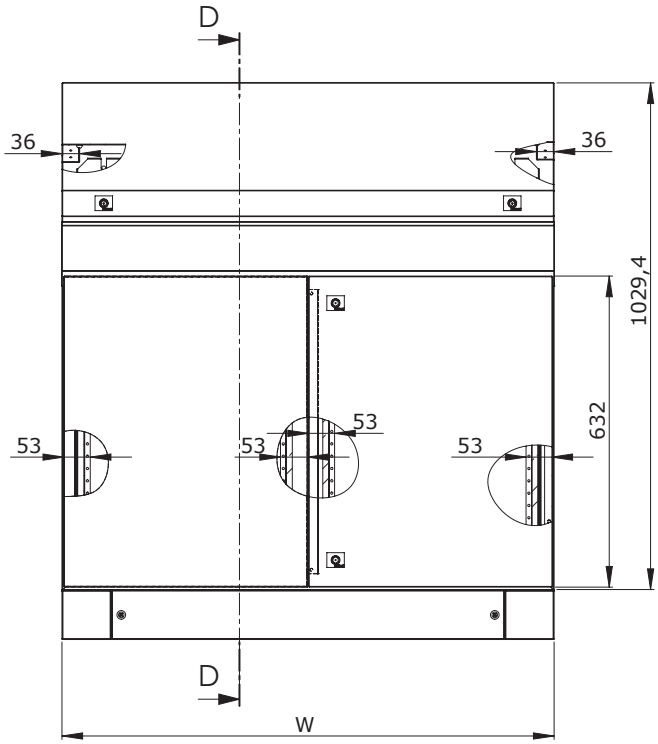

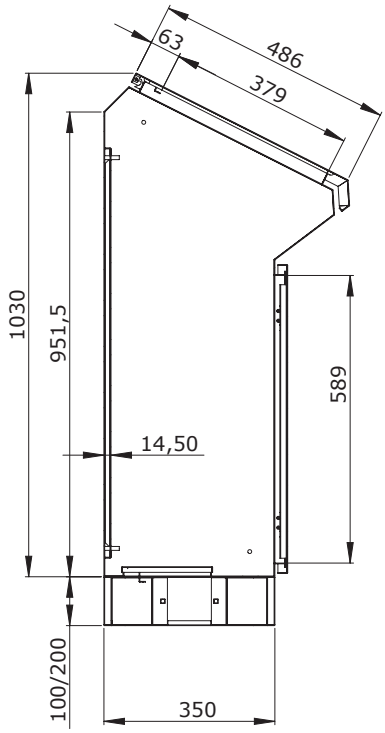

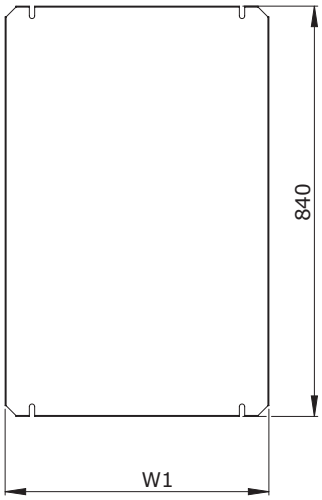

ENCLOSURE WIDTH	W	W1
600	600	540
800	800	740
1000	1000	940
1200	1200	1140

KMT-2000 SERIES

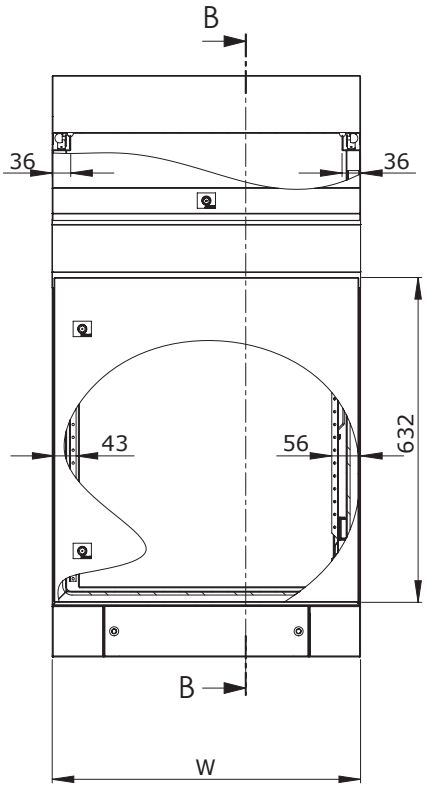

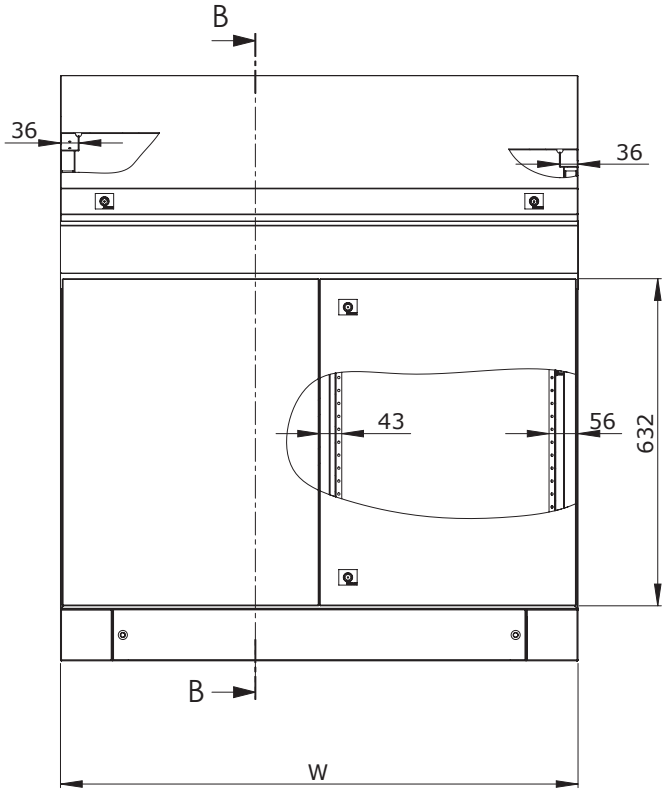

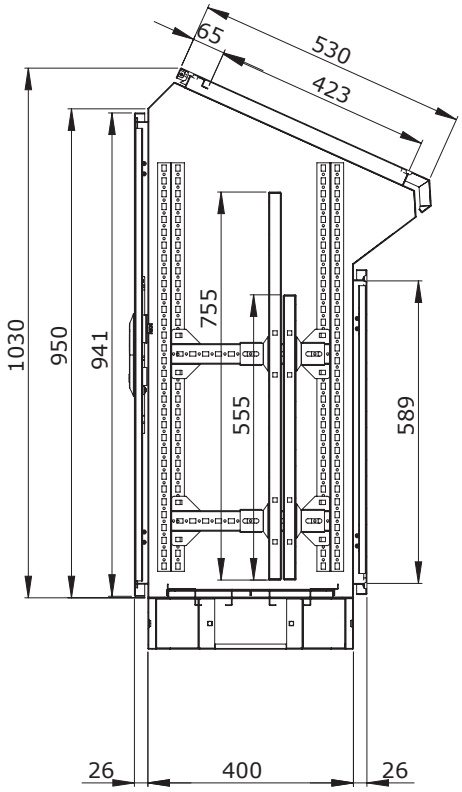

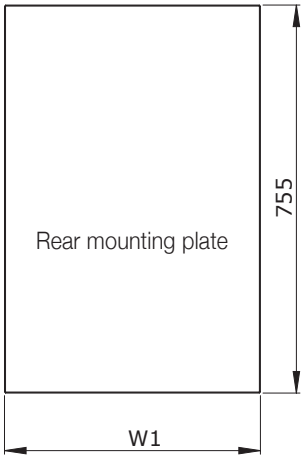

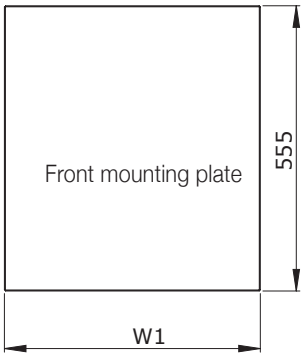

ENCLOSURE WIDTH	W	W1
600	600	498
800	800	698
1000	1000	898
1200	1200	1098

KMP-3000 SERIES

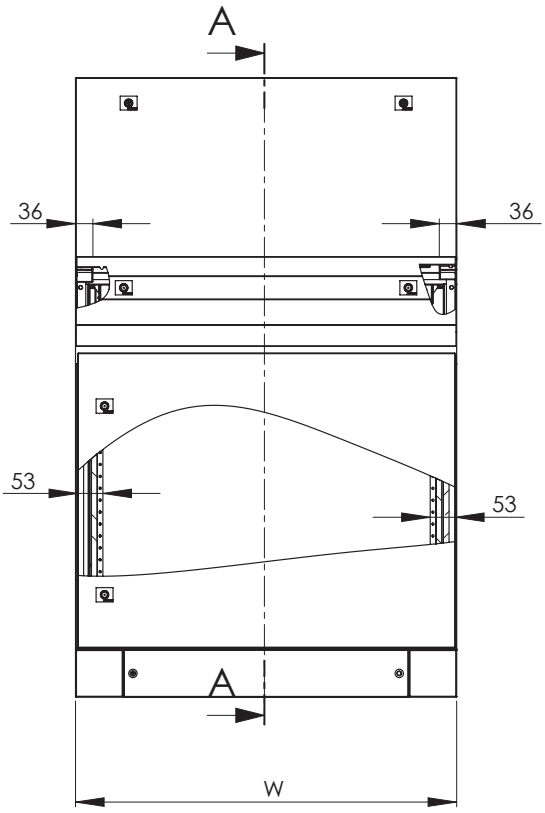

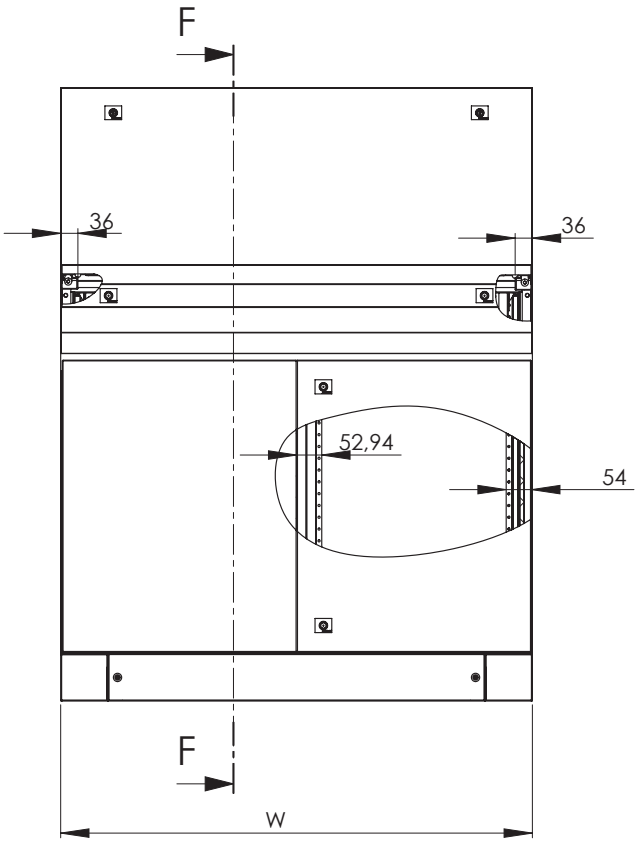

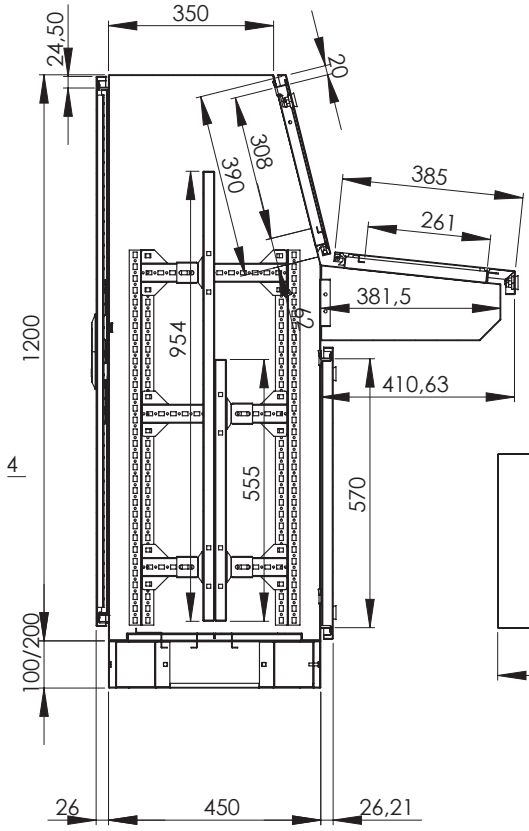

SECTION F-F
SCALE 1 : 10

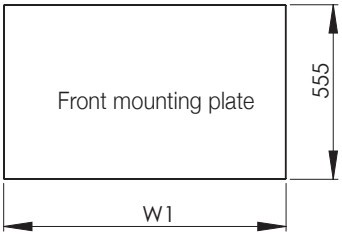

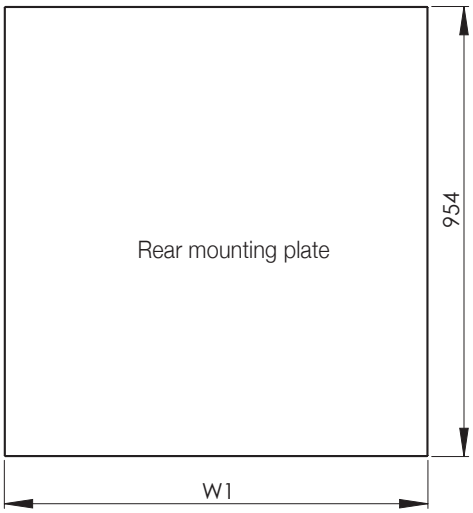

ENCLOSURE WIDTH	W	W1
600	600	498
800	800	698
1000	1000	898
1200	1200	1098

PC CABINET

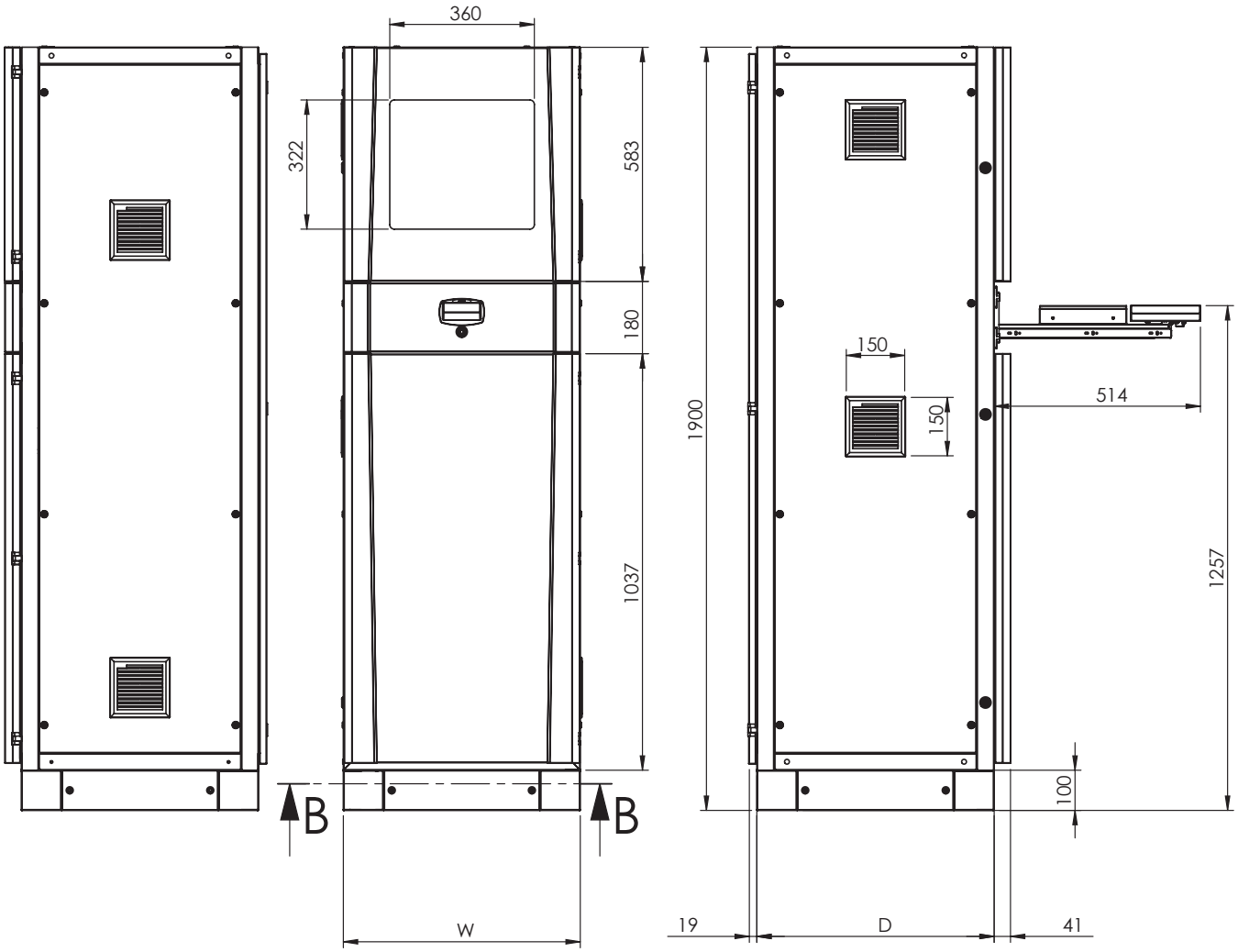

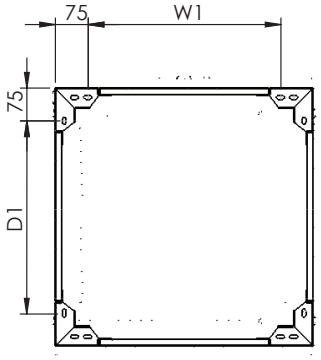

ENCLOSURE WIDTH	W	W1
600	590	440

ENCLOSURE DEPTH	D	D1
600	590	440
800	790	640

TECHNICAL SPECIFICATIONS

MATERIAL INFORMATION

PRODUCTION APPLICATIONS

PACKAGING DETAILS

PROTECTION CLASSIFICATIONS

INFORMATION ON STEEL USED IN OUR PRODUCTS

MILD STEEL	:	6112 DIN EN 10130-99-DCO1
GALVANIZED STEEL	:	1311 DIN EN 10142-00 DX51 D+Z
STAINLESS STEEL	:	Standard use: AISI 304 (1.4301 BS EN 10088) Optional use: AISI 316 (1.4401 BS EN 10088)
ALIMINIUM SHEET (Optional)	:	AlMg3

PRODUCT COATING APPLICATION

Pressurized Spray Cleaning Line

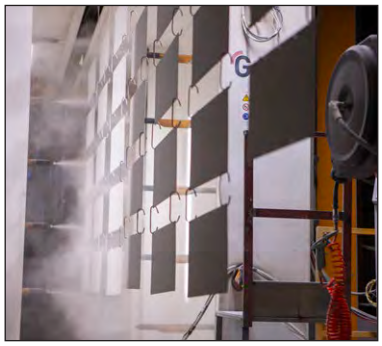

Degreasi → Phosphate-plating → Rinsing → Deionized Passivation

Drying

Coating

Owening → Draining

70-90 µm epoxy polyester powder coating

8-10 µm phosphate

Material

MATERIAL INFORMATION

PLATING APPLICATIONS

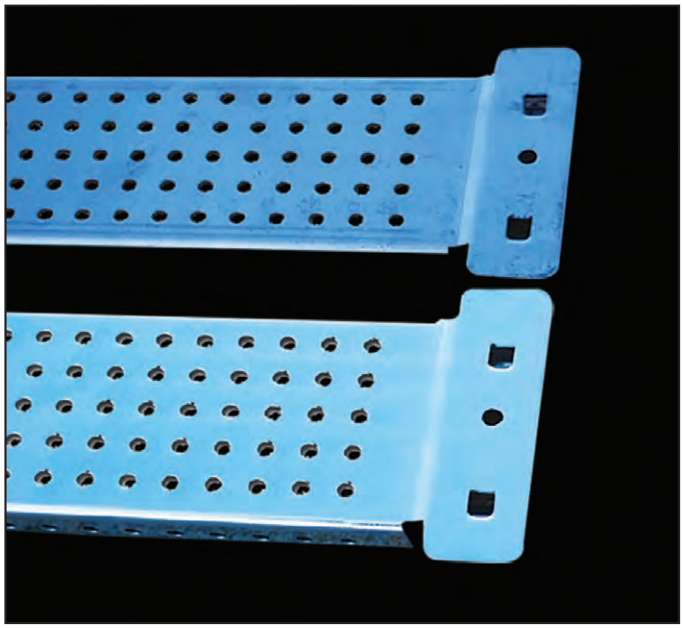

Process-exposed, multiple-perforated, non-coated parts are manufactured from mild steel and plated with (Cr+3) zinc. If these parts are galvanized without plating, perforated or cut areas on the parts can corrode. Therefore, these types of parts (mounting rail etc) are zinc-plated.

SEALING AND GLASS GLUEING APPLICATION

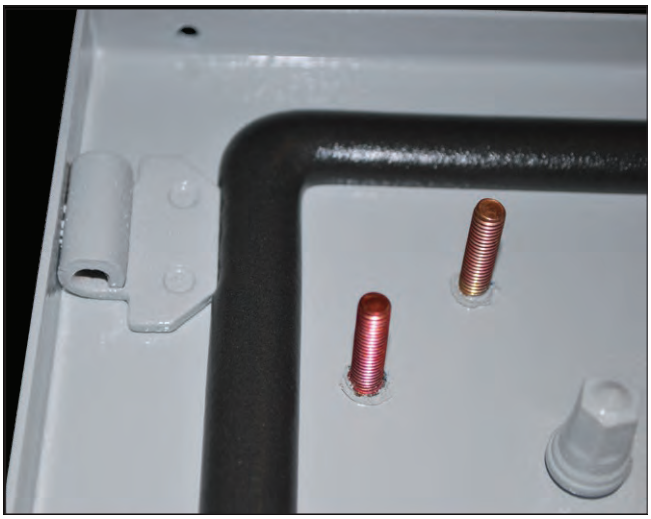

For water and dust impermeability, we use polyurethane liquid gasket in our products.

Operating between -40 °C and +100 °C, this gasket is used in liquid form. It provides a high protectionin continental climates, production sites where temperatures can be high and applications of heat-radiating devices.

PACKAGING

PACKAGING FOR COMPACT ENCLOSURES

PACKAGING FOR FLOOR ASSEMBLED TYPES; TEOS, NEO, NEO HC, KMT, KMP, PC and DT.

PACKAGING

TEOS FLAT PACKAGING

ACCESSORY PACKAGING

Flat package products are packaged by automatic packaging machine.

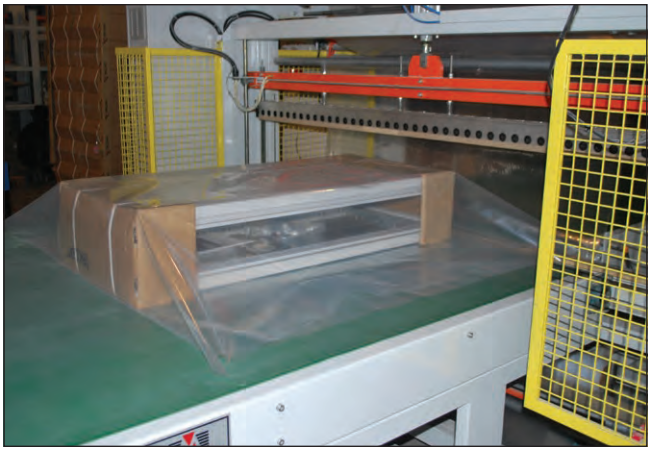

IP PROTECTION CATEGORY ACCORDING TO IEC 60 529

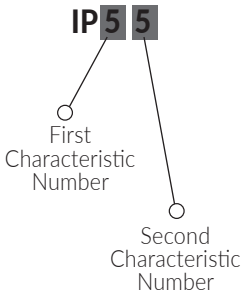

First Characteristic Protection Number Against Foreign Materials		
First Number	Explanation	Definition
1	Protective against 50mm (in diameter) or bigger solid materials	A shaft or ball of 50mm diameter should not completely enter. (a)
2	Protective against solid materials of 12,5mm diameter or more	A shaft or ball of 12,5 mm diameter should not completely enter. (a)
3	Protective against solid materials of 2,5mm diameter or more	A shaft or ball of 2,5 mm diameter should not completely enter. (a)
4	Protective against solid materials of 1,0mm diameter or more	A shaft or ball of 1,0 mm diameter should not completely enter. (a)
5	Dust-resistant	There might be a small amount of dust input. Should not harm device security
6	Dust-resistant	No dust should enter into the enclosure in 20mbar pressure applications

Second Number for Characteristic Water-Resistance		
Second Number	Explanation	Definition
1	Resistant to Water Drops from straight anglesı	Water drops falling at straight angles should not have any harmful impact.
2	Resistant to water drops falling with a straight angle when the enclosure is 15 degrees biased	When the enclosure is 15 degrees biased, water drops falling from both sides should not give any harm.
3	Resistant to water injection	Water-injection coming from both sides at 60 degrees should not leave any damage.
4	Water-splash-resistant	Resistance to water splashes from all angles
5	Water-jet-resistant	Should provide resistance to low-pressure water jet from all angles.
6	Resistant to pressurized water-jet	No dust should enter in the enclosure in 20mbar pressure applications.
7	Resistance to temporary water-immersion	Temporarily immersed in water under standard duration and pressure conditions, the enclosure should not be damaged.
8	Resistance to permanent water-immersion	Permanently immersed in water under standard duration and pressure conditions, the enclosure should not be damaged

UL NEMA STANDARDS SHEET

UL/NEMA Type	PROTECTION EXPLANATION ACCORDING TO UL NEMA STANDARDS
	EXPLANATION
1	Indoor enclosures should have protection against foreign materials
3	Enclosures frequently used indoors should have protection against the harmful effects of solid materials, rain, dust and frosting.
3R	Enclosures frequently used indoors should have protection against the harmful effectsof solid materials, rain, dust and frosting
3S	Enclosures frequently used indoors should have protection against solid materials, rain, dust and snow. Outer mechanisms of the enclosure should be protective against frosting.
4	İ Indoor or outdoor enclosures should be protective against rain, foreign materials, water splashes, hosing as well as external frosting.
4X	İ Indoor or outdoor enclosures should be protective against rain, foreign materials, water splashes, hosing as well as external frosting.
12, 12 K	Enclosures frequently used indoors should have protection against foreign materials, non-corrosive liquid drops, dust settling.
13	Enclosures frequently used indoors should have protection against dust settling, water splashes, oil and non-corrosive cooling liquids or gases.

CABLE GLAND SELECTION SHEET

SELECTION TABLE FOR CABLE GLANDS TO PG SIZE		
PG	Cable Diameter (mm)	Assembling Hole (mm)
11	5 - 10	18.5
13.5	6 - 12	20.5
16	10 - 14	22.5
21	13 - 18	28.5
29	18 - 25	37.5
36	22 - 32	47
42	32 - 38	55
48	37 - 44	60

DRIVE THE ENERGY

ENERGY

distribution products

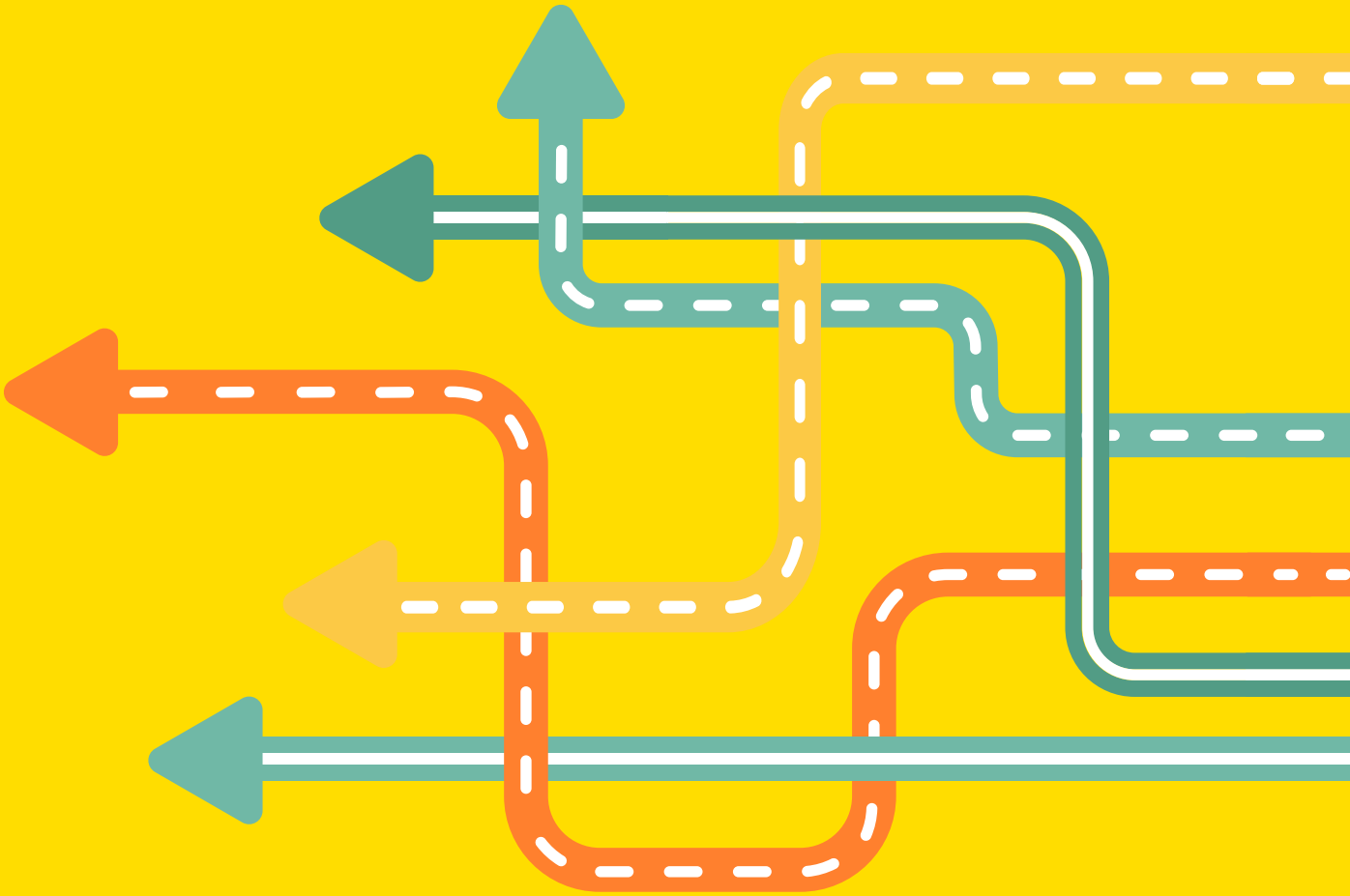

Please contact for
more information

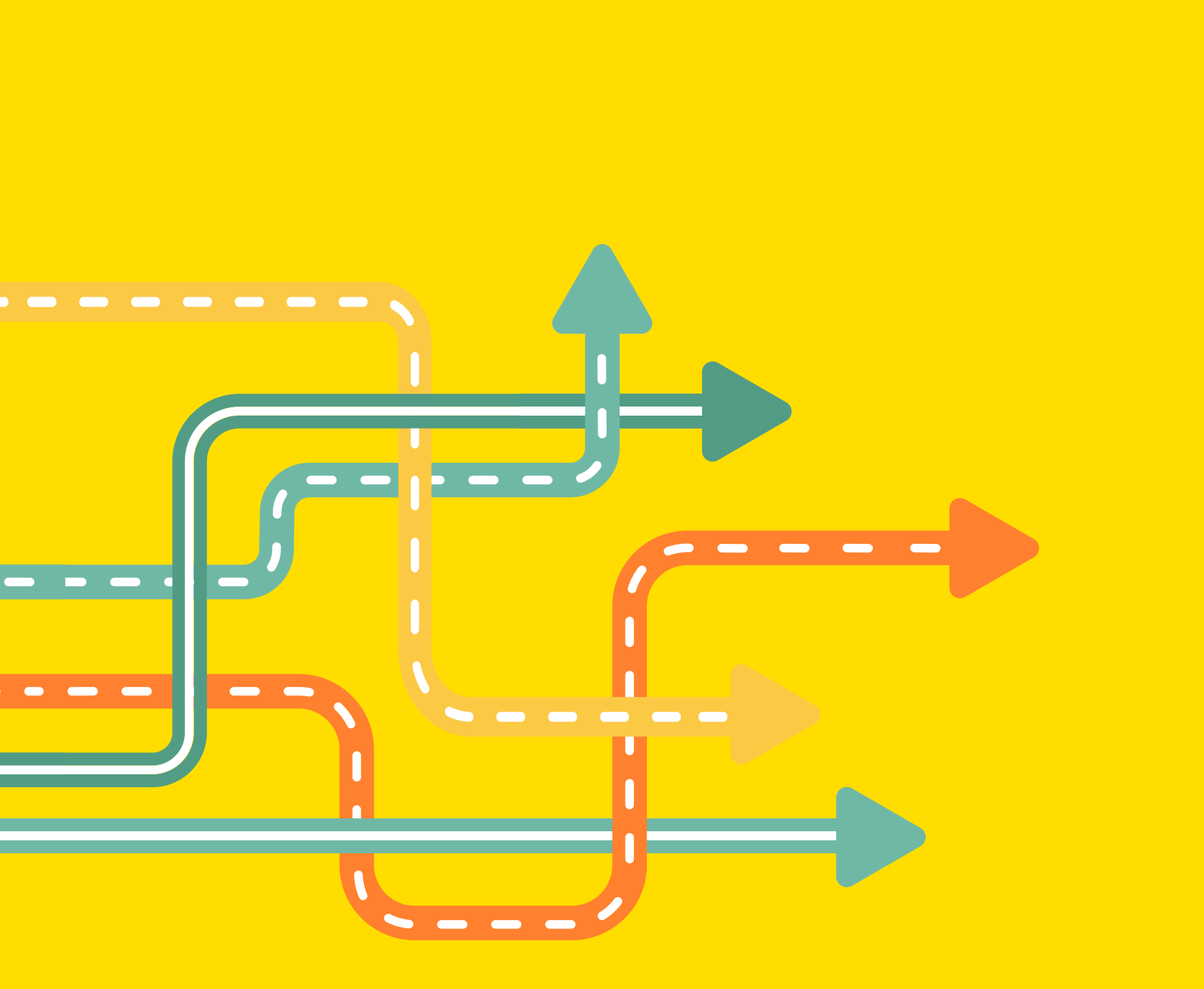

edp-tekpan.com.tr

DISTRIBUTION BLOCKS

FOUR POLE
250A - 160A - 125A

THREE POLE
125A - 160A - 250A

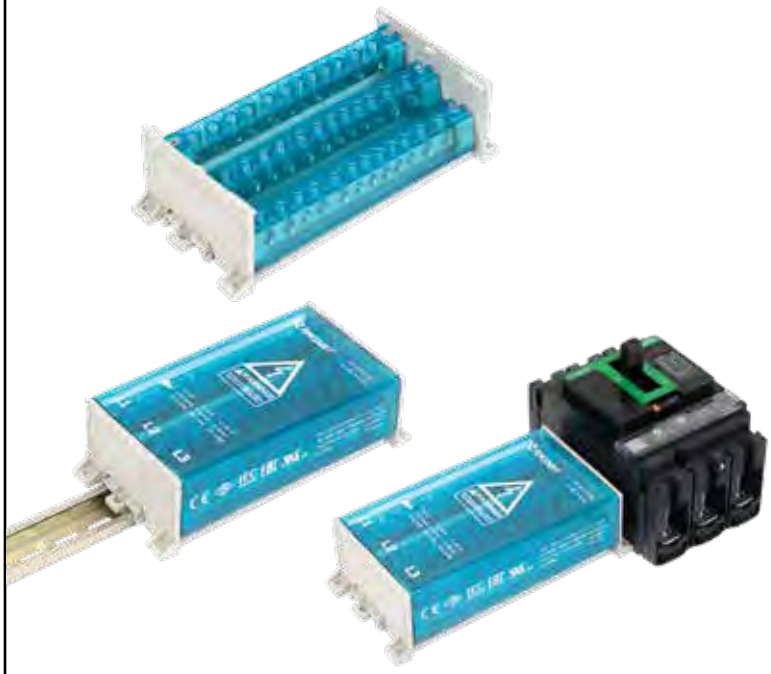

POWER & JOINT TERMINALS
315A-400A-630A

COMBINED DISTRIBUTION BLOCKS
63A-80A-100A-160A-250A

DISTRIBUTION BLOCKS (DIN RAIL TYPE)

FOUR POLE
80A - 125A

THREE POLE
80A - 125A

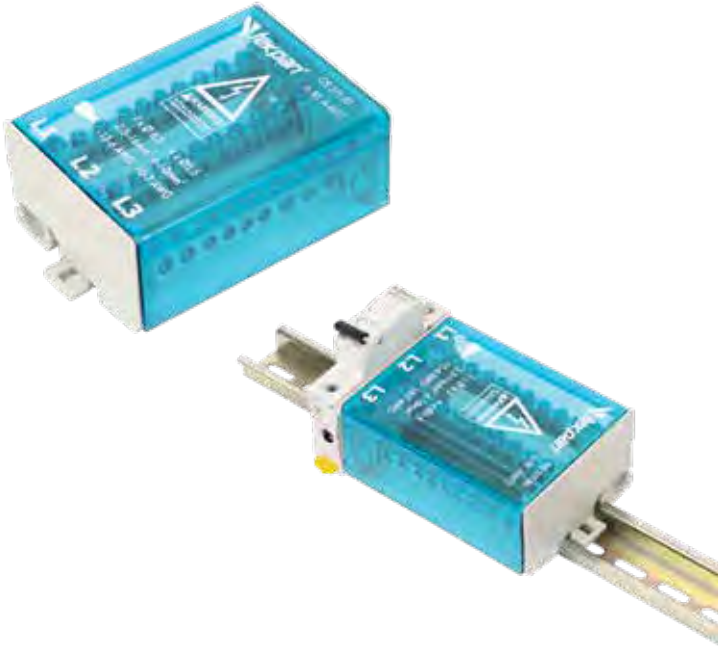

COMPACT DISTRIBUTION BLOCKS
100A-160A-250A-400A

MINI DISTRIBUTION BLOCKS
80A-125A-160A

edp@tekpan.com.tr

NOTES

TEKPAN INDUSTRIAL ENCLOSURES & CABINETS

Kemalpasa O.S.B 17.Sk.No:8 Ulucak Kemalpaşa / Izmir - TURKEY

Phone : +90 232 877 18 77 - 877 13 46 / 47
Fax : +90 232 877 13 48
E-mail : info@tekpan.com.tr
Marketing : marketing@tekpan.com.tr

www.tekpan.com

tekpan®

INDUSTRIAL ENCLOSURES & CABINETS